YAMAHA

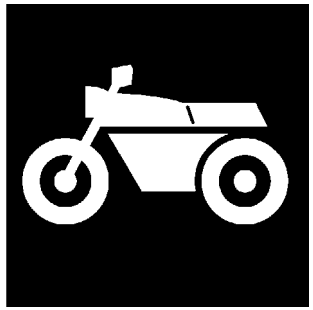

# CATALOGO DE REPUESTOS

# XT660R (5VK4) EUROPE
# XT660R (5VK4) SOUTH AFRICA

1D5VK-300S2

(2D5VK-300S2)

YAMAHA GENUINE Parts & Accessories

A2

XT660R
CATALOGO DE REPUESTOS
©2006 por MBK Industrie
1ª edición, febrero 2006
Todos los derechos reservados.
Toda reproducción o uso no autorizado
sin el consentimiento escrito de
MBK Industrie
quedan expresamente prohibidos

A3

# PROLOGO

Este catálogo de repuestos corresponde a las piezas para el o los modelos que figuran en la página de portada. Al formular el pedido de repuestos, se ruega citar este catálogo y especificar correctamente el número y el nombre de las piezas.

1. Las modificaciones y agregados que se hayan realizado después de la edición de este Catálogo de Repuestos, serán anunciados en las Informaciones de Recambios.
   Es recomendable que se hagan las correcciones necesarias en el Catálogo de Repuestos de acuerdo con las Informaciones de Recambios.

2. Abreviaciones
   En este. Catálogo de Repuestos se emplean las siguientes abreviaciones.

   "UR" Usar el número de partes especificado
   "UN" Usar la cantidad necesaria
   "AP" Piezas sustitutivas
   "LM" Fabricación local (Hay que pedir los repuestos en las cercanías)
   "F#" Nº de bastidor (Nº aplicable a la máquina)
   "O/S" Sobredimensionado

3. La cantidad de componentes para el montaje
   - Los componentes, suministrados como conjunto, se describen con un punto (.) que precede al nombre del parte como se indica a continuación.
   - La numeración que aparece a la derecha de cada descripción indica la cantidad de partes por cada unidad de conjunto.

| CODIGO Nº | DESCRIPCION | CANT. | OBSERVACIONES |
|---|---|---|---|
| 2F5–83310–60 | ENSAMBLAJE DE LA LUZ | 2 | |
| 115–83311–60 | .BOMBILLA (6V–18W) | 1 | |

4. Los colores de los componentes se indican como sigue en la columna de "OBSERVACIONES".

| CODIGO Nº | DESCRIPCION | CANT. | OBSERVACIONES |
|---|---|---|---|
| 2N4–24110–00–X5 | COMP. DEL TANQUE | 2 | MXR |
| 3J1–24240–10 | .GRAFICO, DEL TANQUE | 1 | PARA MXR |

5. Debe tenerse en cuenta que las ilustraciones sirven como guia para la búsqueda de los números de partes y no deben usarse para el montaje. Durante el montaje, se recomienda usar el manual de taller correspondiente.

6. EL asterisco (*) antes del número de referencia indica los elementos modificados después de la primera edición.

7. Números de serie

Nº de Serie del motor

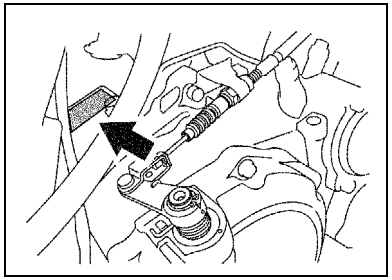

Nº de Serie del bastidor

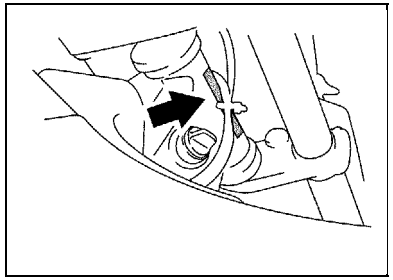

8. Códigos de color aplicables (El símbolo (*) muestra el color de modelo.)

| Abreviatura | Nombre de color | Código de color |
|---|---|---|
| DNMD(*) | DARK GRAY METALLIC D | 0934 |
| DPBSE(*) | DEEP PURPLISH BLUE SOLID E | 0583 |
| MBL2 | MAT BLACK 2 | 0582 |
| S8 | SILVER 8 | 0895 |
| | | |
| | | |
| | | |
| | | |
| | | |
| | | |

9. Informacion para la columna de cantidades

| Columna Nº | Nombre de la columna de cantidades | Destino |
|---|---|---|
| 1 | 01 | 010 |
| 2 | 02 | 030-040 |
| 3 | 03 | 090 |
| 4 | 04 | 020-050-080 |
| 5 | 05 | 070 |

# ROTULO DE MODELO

(1) El rótulo llamada “Rótulo de Modelo” está en la ubicación indicada abajo en el (3). Cuando se utilice este catálogo de repuestos, se ruega cotejar entre el “código de modelo–número de código de producción” del catálogo y el “código de modelo–número de código de producción” indicado en el Rótulo de Modelo fijado en el producto correspondiente.

(2) Indicación del “Rótulo de Modelo”

| a | b |
|---|---|
| ○ xxxx – xxx | |
| ● x c | |

a: Código de tipo de Modelo

b: Número de código de Producción

c: Tipo de color

| |
|---|
| ○ 4TW1–010 |
| ● A |

(3) Ubicación de fijación del Rótulo de Modelo

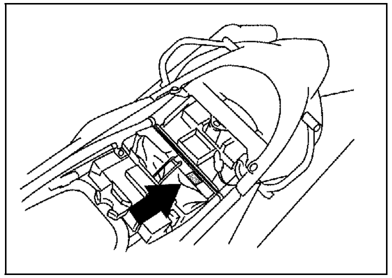

(4) Información de Color

| Código de Modelo | Código de tipo de color | Código de color | Nombre de color | Abreviatura |
|---|---|---|---|---|
| 5VK4 | A | 0583 | DEEP PURPLISH BLUE SOLID E | DPBSE |
| | C | 0934 | DARK GRAY METALLIC D | DNMD |
| | | | | |
| | | | | |
| | | | | |
| | | | | |
| | | | | |
| | | | | |
| | | | | |
| | | | | |

(5) Código de Modelo–Número de código de Producción del Modelo Listado en este Catálogo de Repuestos

| Código de Modelo | Número de Código de Producción | País (destino) |
|---|---|---|
| 5VK4 | 010 | EUROPE |
| | 020 | BELGIUM |
| | 030 | CZECHO |
| | | FINLAND |
| | | HUNGARY |
| | 040 | DENMARK |
| | | SWEDEN |
| | 050 | SPAIN |
| | 070 | UNITED KINGDOM |
| | 080 | PORTUGAL |
| | 090 | SOUTH AFRICA |
| | | |
| | | |
| | | |
| | | |
| | | |
| | | |
| | | |
| | | |
| | | |
| | | |
| | | |
| | | |
| | | |
| | | |

| Código de Modelo | Número de Código de Producción | País (destino) |
|---|---|---|
| | | |
| | | |
| | | |
| | | |
| | | |
| | | |
| | | |
| | | |
| | | |
| | | |
| | | |
| | | |
| | | |
| | | |
| | | |
| | | |
| | | |
| | | |
| | | |
| | | |
| | | |
| | | |
| | | |
| | | |
| | | |

# CONTENIDO

## MOTOR


CULATA DE CILINDRO ..... B2
CILINDRO ..... B3
CIGUENAL & PISTON ..... B4
VALVULA ..... B5
ARBOL DE LEVAS & CADENA ..... B6
BOMBA DE AGUA ..... B7
RADIADOR & MANGUERA ..... B8
BOMBA DE ACEITE ..... B9
ADMISION ..... B11
ADMISION 2 ..... B13
DESCARGA ..... B14
CARTER ..... C2
CUBIERTA DE CARTER 1 ..... C3
EMBRAGUE DEL ARRANQUE ..... C5
EMBRAGUE ..... C6
TRANSMISION ..... C8
LEVA DE CAMBIO & HORQUILLA ..... C10
EJE DE CAMBIO & PEDAL ..... C11


## SHASIS


CUADRO ..... C12
GUARDABARRO ..... C14
CUBIERTA LATERAL ..... D2
BRAZO TRASERO ..... D3
SUSPENSION TRASERO ..... D5
DIRECCION ..... D6
HORQUILLA DELANTERA ..... D8
DEPOSITO DE COMBUSTIBLE ..... D10
ASIENTO ..... D12
RUEDA DELANTERA ..... D14
CALIBRE FRENO DELANTERA ..... D15
RUEDA TRASERA ..... E2
CALIBRE FRENO TRASERA ..... E4
MANILLAR & CABLE ..... E5
CILINDRO MAESTRO DELANTERO ..... E6
SOPORTE & APOYAPIE ..... E7
CILINDRO MAESTRO TRASERO ..... E9
BOVEDA 1 ..... E11
GENERADOR ..... E12
LUZ DE DESTELLADOR ..... E13
MEDIDOR ..... E14
FARO DELANTERO ..... E15
LUZ DE COLA ..... F2
INTERRUPTOR DE MANILLAR&PALANC ..... F3
EQUIPO ELECTRICO 1 ..... F4
EQUIPO ELECTRICO 2 ..... F6


## INDICE


INDICE NUMERICO ..... M1

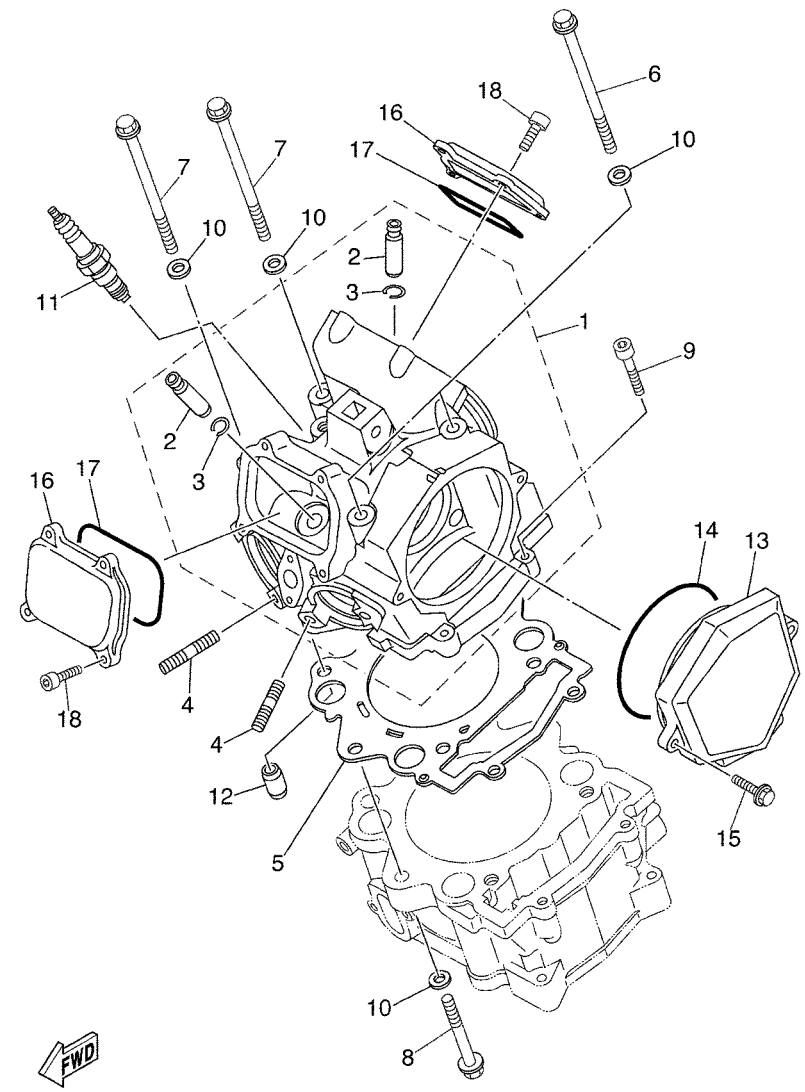


5VK1300-C010

## FIG. 1 CULATA DE CILINDRO

| REF. Nº | CODIGO Nº | DESCRIPCION | 01 | 02 | 03 | 04 | 05 | OBSERVACIONES |
|---|---|---|---|---|---|---|---|---|
| 1 | 5VK–E1101–00 | CULATA DE CILINDRO COMPLETA | 1 | 1 | 1 | 1 | 1 | |
| 2 | 4G0–11133–11 | .GUIA DE VALVULA 1 | 4 | 4 | 4 | 4 | 4 | |
| 3 | 93440–10085 | .PRESILLA REDONDA | 4 | 4 | 4 | 4 | 4 | |
| 4 | 95617–08618 | PERNO DE PUNTAL | 4 | 4 | 4 | 4 | 4 | |
| 5 | 5VK–11181–00 | JUNTA, DE CULATA 1 | 1 | 1 | 1 | 1 | 1 | |
| 6 | 90105–09002 | TORNILLO | 2 | 2 | 2 | 2 | 2 | |
| 7 | 90105–09004 | TORNILLO | 2 | 2 | 2 | 2 | 2 | |
| 8 | 90105–09003 | TORNILLO | 2 | 2 | 2 | 2 | 2 | |
| 9 | 91317–06030 | PERNO | 2 | 2 | 2 | 2 | 2 | |
| 10 | 90201–096J9 | ARANDELA PLANA | 6 | 6 | 6 | 6 | 6 | |
| 11 | 94701–00X09 | BUJIA (NGK CR7E) | 1 | 1 | 1 | 1 | 1 | |
| 12 | 93612–16X00 | PASADOR DE CLAVIJA | 2 | 2 | 2 | 2 | 2 | |
| 13 | 5VK–E1185–00 | CUBIERTA CULATA CIL.LAT.1 | 1 | 1 | 1 | 1 | 1 | |
| 14 | 93210–96X00 | ANILLO O | 1 | 1 | 1 | 1 | 1 | |
| 15 | 90105–06X06 | TORNILLO | 2 | 2 | 2 | 2 | 2 | |
| 16 | 5VK–E1186–00 | CUBIERTA CULATA CIL.LAT.2 | 2 | 2 | 2 | 2 | 2 | |
| 17 | 93210–78X00 | ANILLO O | 2 | 2 | 2 | 2 | 2 | |
| 18 | 91317–06018 | PERNO | 8 | 8 | 8 | 8 | 8 | |

## FIG. 2 CILINDRO

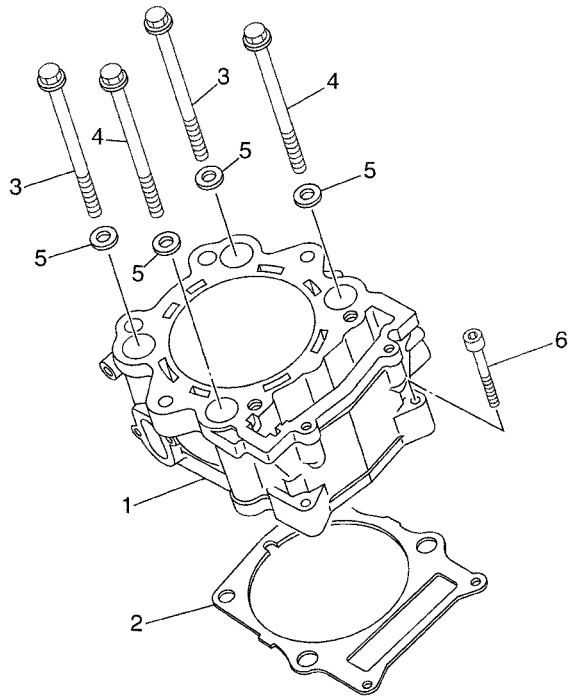

5VK1300-C020

| REF. Nº | CODIGO Nº | DESCRIPCION | 01 | 02 | 03 | 04 | 05 | OBSERVACIONES |
|---|---|---|---|---|---|---|---|---|
| 1 | 5VK–11311–00 | CILINDRO 1 | 1 | 1 | 1 | 1 | 1 | |
| 2 | 5VK–11351–00 | JUNTA, DE CILINDRO | 1 | 1 | 1 | 1 | 1 | |
| 3 | 90105–10078 | TORNILLO | 2 | 2 | 2 | 2 | 2 | |
| 4 | 90105–10077 | TORNILLO | 2 | 2 | 2 | 2 | 2 | |
| 5 | 90201–101A4 | ARANDELA PLANA | 4 | 4 | 4 | 4 | 4 | |
| 6 | 91317–06040 | PERNO | 2 | 2 | 2 | 2 | 2 | |

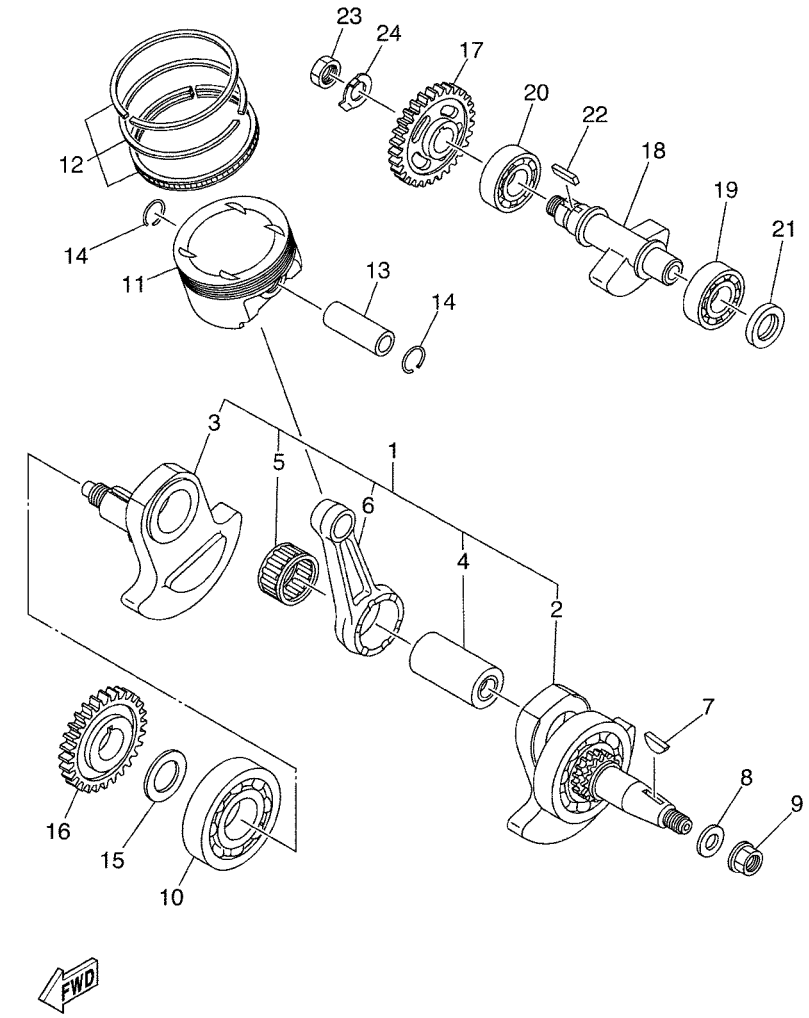


5VK1300-C030

## FIG. 3 CIGUENAL & PISTON

| REF. Nº | CODIGO Nº | DESCRIPCION | 01 | 02 | 03 | 04 | 05 | OBSERVACIONES |
|---|---|---|---|---|---|---|---|---|
| 1 | 5VK–11400–00 | CIGUENAL COMPLETO | 1 | 1 | 1 | 1 | 1 | |
| 2 | 5VK–11401–09 | .MANIVELA SEMI-ARMADA 1 | 1 | 1 | 1 | 1 | 1 | |
| 3 | 5VK–11422–00 | .MANIVELA 2 | 1 | 1 | 1 | 1 | 1 | |
| 4 | 5VK–11681–00 | .PASADOR MANIVELA 1 | 1 | 1 | 1 | 1 | 1 | |
| 5 | 93310–84010 | .COJINETE DE RODILLOS | 1 | 1 | 1 | 1 | 1 | |
| 6 | 5VK–11651–00 | .BIELA | 1 | 1 | 1 | 1 | 1 | |
| 7 | 90280–05001 | CUNA WOODRUFF | 1 | 1 | 1 | 1 | 1 | |
| 8 | 90201–16013 | ARANDELA PLANA | 1 | 1 | 1 | 1 | 1 | |
| 9 | 90179–16448 | TUERCA | 1 | 1 | 1 | 1 | 1 | |
| 10 | 93306–308Y0 | COJINETE | 1 | 1 | 1 | 1 | 1 | |
| 11 | 5VK–11631–00 | PISTON (NORMA) | 1 | 1 | 1 | 1 | 1 | |
| 12 | 5VK–11603–00 | JUEGO DE ANILLOS (NORMA) | 1 | 1 | 1 | 1 | 1 | |
| 13 | 5VK–11633–00 | PASADOR, PISTON | 1 | 1 | 1 | 1 | 1 | |
| 14 | 93450–24824 | SEGURO | 2 | 2 | 2 | 2 | 2 | |
| 15 | 90201–30X00 | ARANDELA PLANA | 1 | 1 | 1 | 1 | 1 | |
| 16 | 5VK–11536–00 | ENGRANAJE TRACCION | 1 | 1 | 1 | 1 | 1 | |
| 17 | 5VK–11531–00 | ENGRANAJE CONTRAPESO | 1 | 1 | 1 | 1 | 1 | |
| 18 | 5VK–11454–00 | PESO 1 | 1 | 1 | 1 | 1 | 1 | |
| 19 | 93306–305YA | COJINETE | 1 | 1 | 1 | 1 | 1 | |
| 20 | 93306–305X4 | COJINETE | 1 | 1 | 1 | 1 | 1 | |
| 21 | 93101–25106 | SELLO ACEITE | 1 | 1 | 1 | 1 | 1 | |
| 22 | 90282–05058 | CHAVETA, RECTA | 1 | 1 | 1 | 1 | 1 | |
| 23 | 90170–18003 | TUERCA | 1 | 1 | 1 | 1 | 1 | |
| 24 | 90215–18X00 | ARANDELA DE CIERRE | 1 | 1 | 1 | 1 | 1 | |

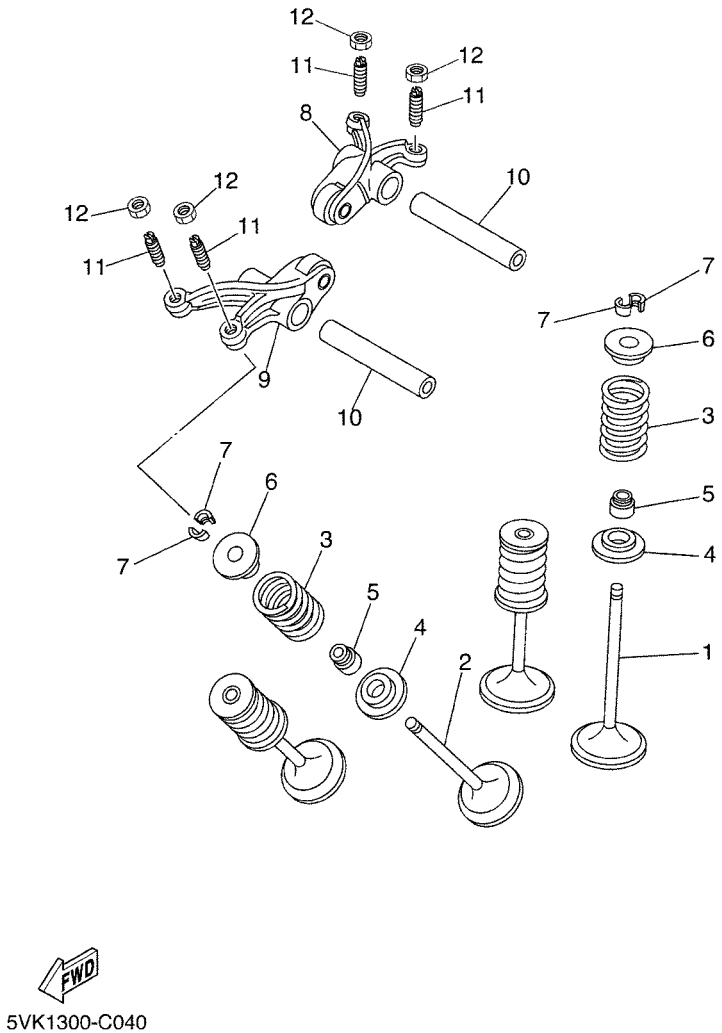


## FIG. 4 VALVULA

| REF. Nº | CODIGO Nº | DESCRIPCION | 01 | 02 | 03 | 04 | 05 | OBSERVACIONES |
|---|---|---|---|---|---|---|---|---|
| 1 | 5VK–12111–00 | VALVULA DE ADMISION | 2 | 2 | 2 | 2 | 2 | |
| 2 | 5VK–12121–00 | VALVULA DE ESCAPE | 2 | 2 | 2 | 2 | 2 | |
| 3 | 5VK–12113–00 | RESORTE VALVULA INTERNA | 4 | 4 | 4 | 4 | 4 | |
| 4 | 3YF–12116–00 | ASIENTO RESORTE DE VALVULA | 4 | 4 | 4 | 4 | 4 | |
| 5 | 5H0–12119–00 | SELLO DE ACEITE VALVULA | 4 | 4 | 4 | 4 | 4 | |
| 6 | 3YF–12117–01 | RETEN RESORTE DE VALVULA | 4 | 4 | 4 | 4 | 4 | |
| 7 | 4G0–12118–00 | SEGURO DE VALVULA | 8 | 8 | 8 | 8 | 8 | |
| 8 | 5VK–12151–00 | BRAZO DE BALANCIN DE VALVULA | 1 | 1 | 1 | 1 | 1 | |
| 9 | 5VK–12161–00 | BRAZO DE BALANCIN DE VALVULA | 1 | 1 | 1 | 1 | 1 | |
| 10 | 5VK–12146–00 | ARBOL DE BALANCIN | 2 | 2 | 2 | 2 | 2 | |
| 11 | 5BP–12159–01 | TORNILLO DE AJUSTE DE VALVULA | 4 | 4 | 4 | 4 | 4 | |
| 12 | 90170–06128 | TUERCA | 4 | 4 | 4 | 4 | 4 | |

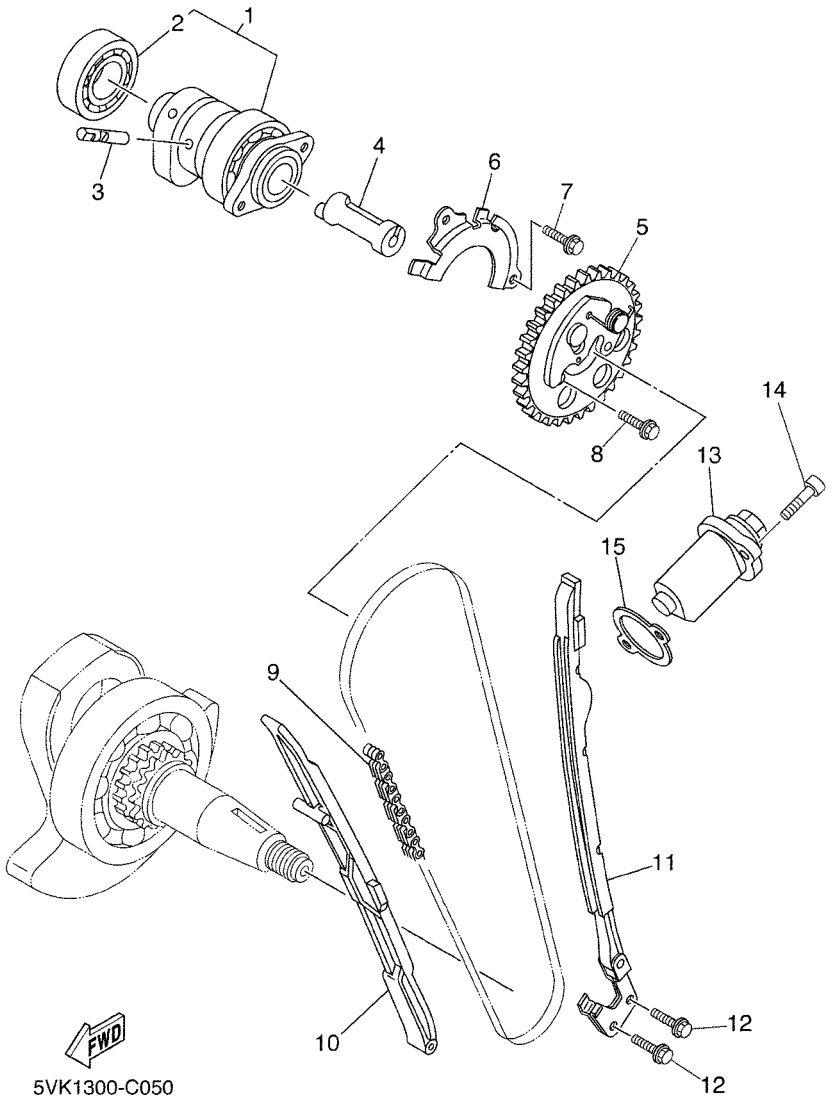


## FIG. 5 ARBOL DE LEVAS & CADENA

| REF. Nº | CODIGO Nº | DESCRIPCION | 01 | 02 | 03 | 04 | 05 | OBSERVACIONES |
|---|---|---|---|---|---|---|---|---|
| 1 | 5VK–E2170–00 | ARBOL DE LEVAS COMPLETO 1 | 1 | 1 | 1 | 1 | 1 | |
| 2 | 93306–072Y1 | .COJINETE | 1 | 1 | 1 | 1 | 1 | |
| 3 | 5VK–12284–00 | PASADOR DE DESCOMPRESION | 1 | 1 | 1 | 1 | 1 | |
| 4 | 5VK–12290–00 | PALANCA RESORTE DESCOMPRESION | 1 | 1 | 1 | 1 | 1 | |
| 5 | 5VK–12280–00 | EQUIPO DE DESCOMPRESION | 1 | 1 | 1 | 1 | 1 | |
| 6 | 5VK–1111F–00 | PLACA | 1 | 1 | 1 | 1 | 1 | |
| 7 | 95027–06012 | PERNO, DE BRIDA | 2 | 2 | 2 | 2 | 2 | |
| 8 | 90105–07004 | TORNILLO | 2 | 2 | 2 | 2 | 2 | |
| 9 | 94591–57126 | CADENA (98XRH2010-126M) | 1 | 1 | 1 | 1 | 1 | |
| 10 | 5VK–12231–00 | TOPE DE GUIA 1 | 1 | 1 | 1 | 1 | 1 | |
| 11 | 5VK–12241–00 | TOPE DE GUIA 2 | 1 | 1 | 1 | 1 | 1 | |
| 12 | 90119–06X05 | TORNILLO CON ARANDELA | 2 | 2 | 2 | 2 | 2 | |
| 13 | 3TB–12210–00 | TENSOR CADENA DE LEVA | 1 | 1 | 1 | 1 | 1 | |
| 14 | 91317–06025 | PERNO | 2 | 2 | 2 | 2 | 2 | |
| 15 | 4DW–12213–00 | EMPAQUE DE CAJA TENSOR | 1 | 1 | 1 | 1 | 1 | |

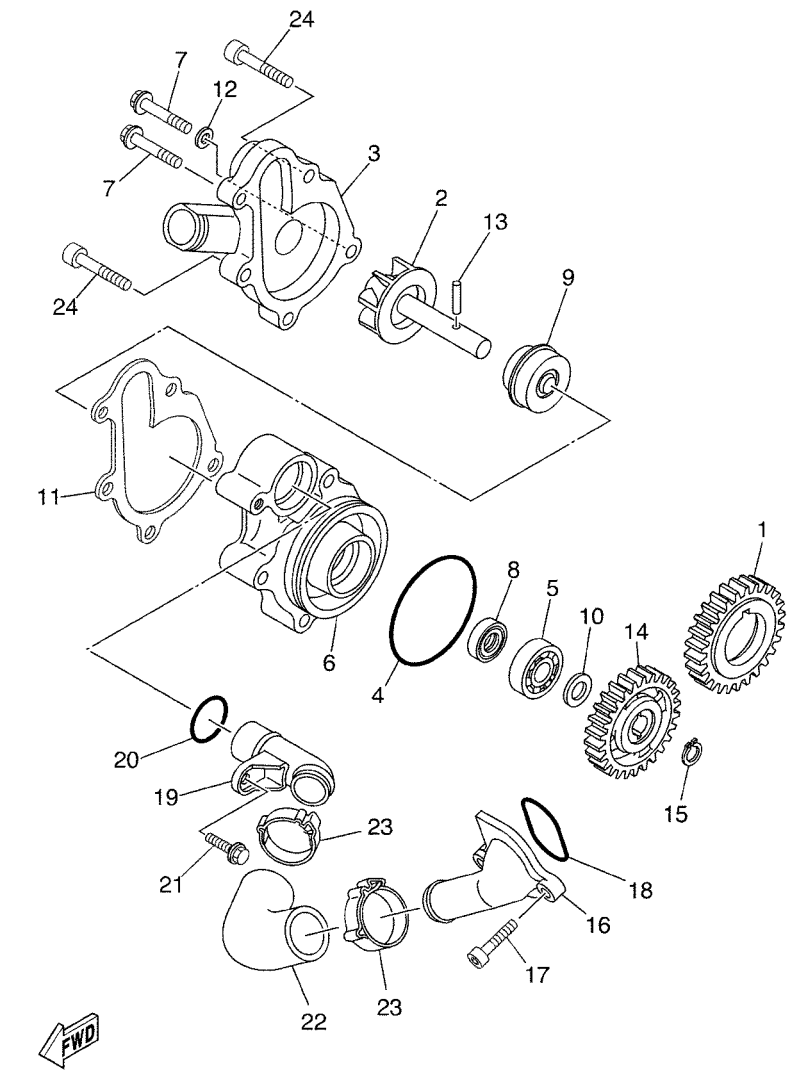


5VK1300-C060

## FIG. 6 BOMBA DE AGUA

| REF. Nº | CODIGO Nº | DESCRIPCION | 01 | 02 | 03 | 04 | 05 | OBSERVACIONES |
|---|---|---|---|---|---|---|---|---|
| 1 | 5VK–12436–00 | ENGRANAJE DE TRACCION | 1 | 1 | 1 | 1 | 1 | |
| 2 | 5VK–12450–00 | EJE IMPULSOR COMPLETO | 1 | 1 | 1 | 1 | 1 | |
| 3 | 5VK–12422–00 | CUBIERTA DE CAJA | 1 | 1 | 1 | 1 | 1 | |
| 4 | 93210–61750 | ANILLO O | 1 | 1 | 1 | 1 | 1 | |
| 5 | 93306–00106 | COJINETE | 1 | 1 | 1 | 1 | 1 | |
| 6 | 5VK–12421–00 | CAJA DE BOMBA DE AGUA | 1 | 1 | 1 | 1 | 1 | |
| 7 | 95027–06025 | PERNO, DE BRIDA | 2 | 2 | 2 | 2 | 2 | |
| 8 | 93101–12173 | SELLO ACEITE | 1 | 1 | 1 | 1 | 1 | |
| 9 | 11H–12438–10 | SELLO MECANICO | 1 | 1 | 1 | 1 | 1 | |
| 10 | 90201–12541 | ARANDELA PLANA | 1 | 1 | 1 | 1 | 1 | |
| 11 | 5VK–12428–00 | JUNTA, DE CBTA.CAJA 2 | 1 | 1 | 1 | 1 | 1 | |
| 12 | 90430–06014 | JUNTA | 1 | 1 | 1 | 1 | 1 | |
| 13 | 93603–16219 | PASADOR DE CLAVIJA | 1 | 1 | 1 | 1 | 1 | |
| 14 | 5VK–12459–00 | ENGRANAJE EJE IMPULSOR | 1 | 1 | 1 | 1 | 1 | |
| 15 | 99009–12400 | PRESILLA REDONDA | 1 | 1 | 1 | 1 | 1 | |
| 16 | 5VK–E2469–00 | CONDUCTO | 1 | 1 | 1 | 1 | 1 | |
| 17 | 91317–06020 | PERNO | 2 | 2 | 2 | 2 | 2 | |
| 18 | 93210–33X00 | ANILLO O | 1 | 1 | 1 | 1 | 1 | |
| 19 | 5VK–12481–00 | TUBO 1 | 1 | 1 | 1 | 1 | 1 | |
| 20 | 93210–21X00 | ANILLO O | 1 | 1 | 1 | 1 | 1 | |
| 21 | 91317–06012 | PERNO | 1 | 1 | 1 | 1 | 1 | |
| 22 | 5VK–12577–00 | MANGUERA 2 | 1 | 1 | 1 | 1 | 1 | |
| 23 | 90467–29800 | PRESILLA | 2 | 2 | 2 | 2 | 2 | |
| 24 | 91317–06050 | PERNO | 3 | 3 | 3 | 3 | 3 | |

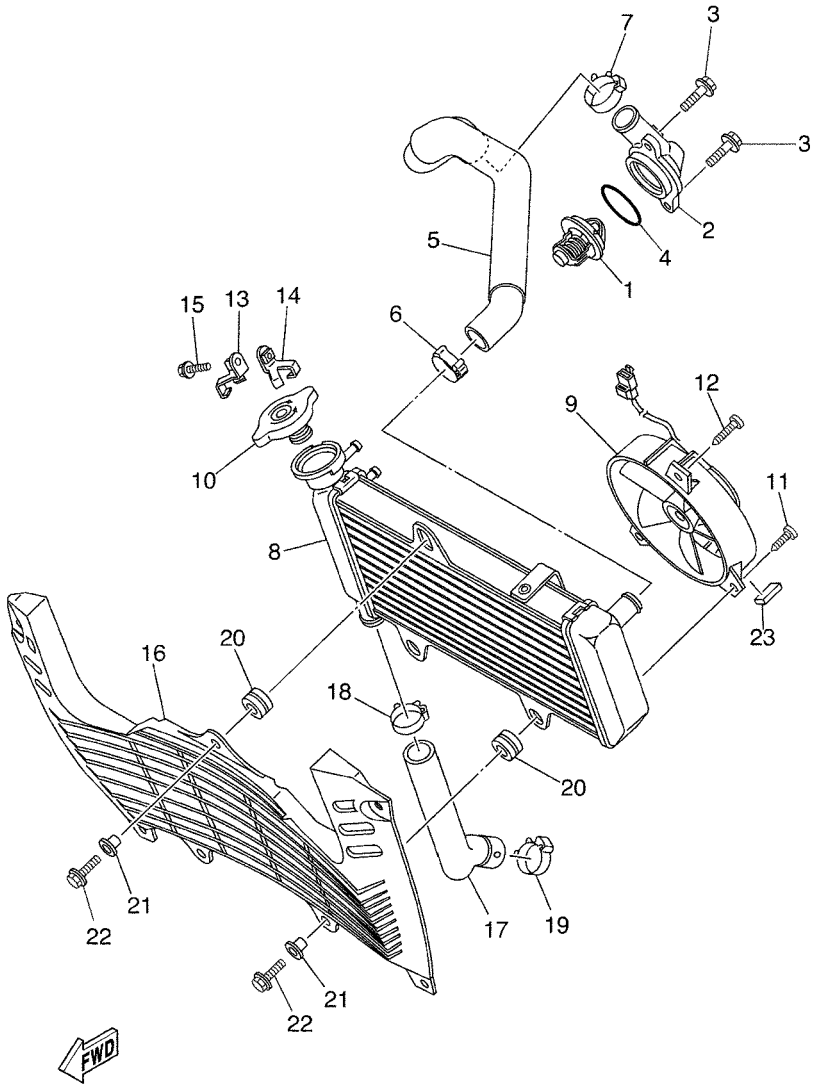


5VK1300-C070

## FIG. 7 RADIADOR & MANGUERA

| REF. Nº | CODIGO Nº | DESCRIPCION | 01 | 02 | 03 | 04 | 05 | OBSERVACIONES |
|---|---|---|---|---|---|---|---|---|
| 1 | 5VK–12410–00 | TERMOSTATO CONJUNTO | 1 | 1 | 1 | 1 | 1 | |
| 2 | 5VK–E2413–00 | CUBIERTA TERMOSTATO | 1 | 1 | 1 | 1 | 1 | |
| 3 | 90105–06X06 | TORNILLO | 2 | 2 | 2 | 2 | 2 | |
| 4 | 93210–41042 | ANILLO O | 1 | 1 | 1 | 1 | 1 | |
| 5 | 5VK–E2578–10 | MANGUERA 3 | 1 | 1 | 1 | 1 | 1 | |
| 6 | 90467–27800 | PRESILLA | 1 | 1 | 1 | 1 | 1 | |
| 7 | 90467–29800 | PRESILLA | 1 | 1 | 1 | 1 | 1 | |
| 8 | 5VK–E2461–00 | RADIADOR COMPLETO | 1 | 1 | 1 | 1 | 1 | |
| 9 | 5VK–E2405–00 | COMPRESOR | 1 | 1 | 1 | 1 | 1 | |
| 10 | 5VK–E2462–00 | TAPON, DEL RADIADOR | 1 | 1 | 1 | 1 | 1 | |
| 11 | 90169–05802 | TORNILLO | 1 | 1 | 1 | 1 | 1 | |
| 12 | 90169–05801 | TORNILLO | 2 | 2 | 2 | 2 | 2 | |
| 13 | 5VK–E2437–00 | TOPE | 1 | 1 | 1 | 1 | 1 | |
| 14 | 5VK–E2437–10 | TOPE | 1 | 1 | 1 | 1 | 1 | |
| 15 | 95807–06010 | TORNILLO | 1 | 1 | 1 | 1 | 1 | |
| 16 | 5VK–E2498–00 | PROTECTOR | 1 | 1 | 1 | 1 | 1 | |
| 17 | 5VK–E2579–10 | MANGUERA 4 | 1 | 1 | 1 | 1 | 1 | |
| 18 | 90467–27800 | PRESILLA | 1 | 1 | 1 | 1 | 1 | |
| 19 | 90467–29800 | PRESILLA | 1 | 1 | 1 | 1 | 1 | |
| 20 | 90480–18276 | TAPON | 3 | 3 | 3 | 3 | 3 | |
| 21 | 90387–06042 | ESPACIADOR | 3 | 3 | 3 | 3 | 3 | |
| 22 | 97507–06525 | PERNO CON ARANDELA | 3 | 3 | 3 | 3 | 3 | |
| 23 | 1FK–84527–00 | AMORTIGUADOR | 1 | 1 | 1 | 1 | 1 | |

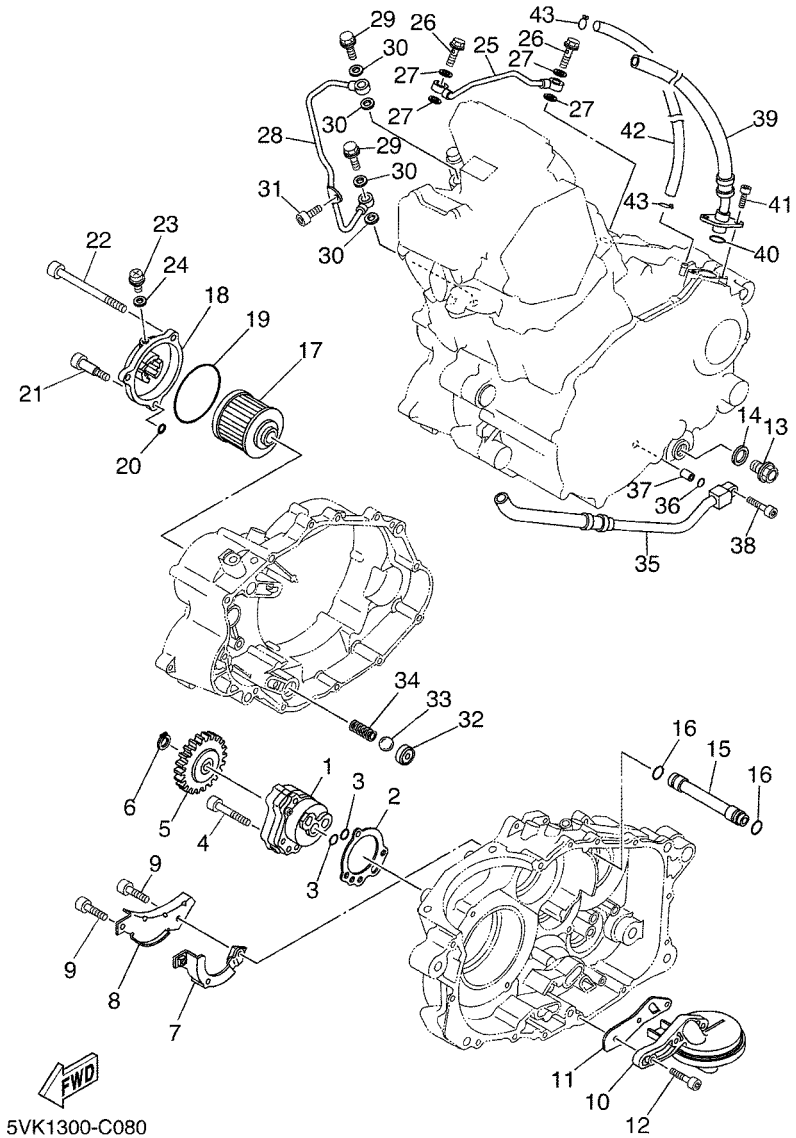


## FIG. 8 BOMBA DE ACEITE

| REF. Nº | CODIGO Nº | DESCRIPCION | 01 | 02 | 03 | 04 | 05 | OBSERVACIONES |
|---|---|---|---|---|---|---|---|---|
| 1 | 5LP–13300–00 | BOMBA DE ACEITE COMPLETA | 1 | 1 | 1 | 1 | 1 | |
| 2 | 5LP–13329–00 | EMPAQUE TAPA DE BOMBA | 1 | 1 | 1 | 1 | 1 | |
| 3 | 93210–13X00 | ANILLO O | 2 | 2 | 2 | 2 | 2 | |
| 4 | 92017–06035 | PERNO | 3 | 3 | 3 | 3 | 3 | |
| 5 | 3AJ–13325–00 | ENGRANAJE IMPULSOR DE BOMBA 1 | 1 | 1 | 1 | 1 | 1 | |
| 6 | 99009–11400 | PRESILLA REDONDA | 1 | 1 | 1 | 1 | 1 | |
| 7 | 5VK–13356–00 | CUBIERTA DE BOMBA 2 | 1 | 1 | 1 | 1 | 1 | |
| 8 | 5VK–13327–00 | CUBIERTA ENGRANAJE DE BOMBA | 1 | 1 | 1 | 1 | 1 | |
| 9 | 91317–05008 | PERNO | 2 | 2 | 2 | 2 | 2 | |
| 10 | 5VK–WE343–00 | FILTRO COMPL. | 1 | 1 | 1 | 1 | 1 | |
| 11 | 5VK–E3415–00 | SELLO COLADOR ACEITE | 1 | 1 | 1 | 1 | 1 | |
| 12 | 91317–06020 | PERNO | 3 | 3 | 3 | 3 | 3 | |
| 13 | 90340–14132 | TORNILLO, DE DRENAJE | 1 | 1 | 1 | 1 | 1 | |
| 14 | 214–11198–01 | EMPAQUE | 1 | 1 | 1 | 1 | 1 | |
| 15 | 5VK–13181–00 | TUBO CONDUCTOR 3 | 1 | 1 | 1 | 1 | 1 | |
| 16 | 93210–11073 | ANILLO O | 2 | 2 | 2 | 2 | 2 | |
| 17 | 4X7–13440–01 | ELEMENTO FILTRO DE ACEITE | 1 | 1 | 1 | 1 | 1 | |
| 18 | 2WK–13447–00 | TAPA DEL ELEMENTO | 1 | 1 | 1 | 1 | 1 | |
| 19 | 93210–64297 | ANILLO O | 1 | 1 | 1 | 1 | 1 | |
| 20 | 93210–07X01 | ANILLO O | 1 | 1 | 1 | 1 | 1 | |
| 21 | 90109–06419 | PERNO | 1 | 1 | 1 | 1 | 1 | |
| 22 | 91317–06095 | PERNO | 2 | 2 | 2 | 2 | 2 | |
| 23 | 90149–05110 | TORNILLO DE REGLAJE | 1 | 1 | 1 | 1 | 1 | |
| 24 | 90430–05126 | JUNTA | 1 | 1 | 1 | 1 | 1 | |
| 25 | 5VK–13161–00 | TUBO CONDUCTOR 1 | 1 | 1 | 1 | 1 | 1 | |
| 26 | 90401–08133 | PERNO DE UNION | 2 | 2 | 2 | 2 | 2 | |
| 27 | 90430–08204 | JUNTA | 4 | 4 | 4 | 4 | 4 | |

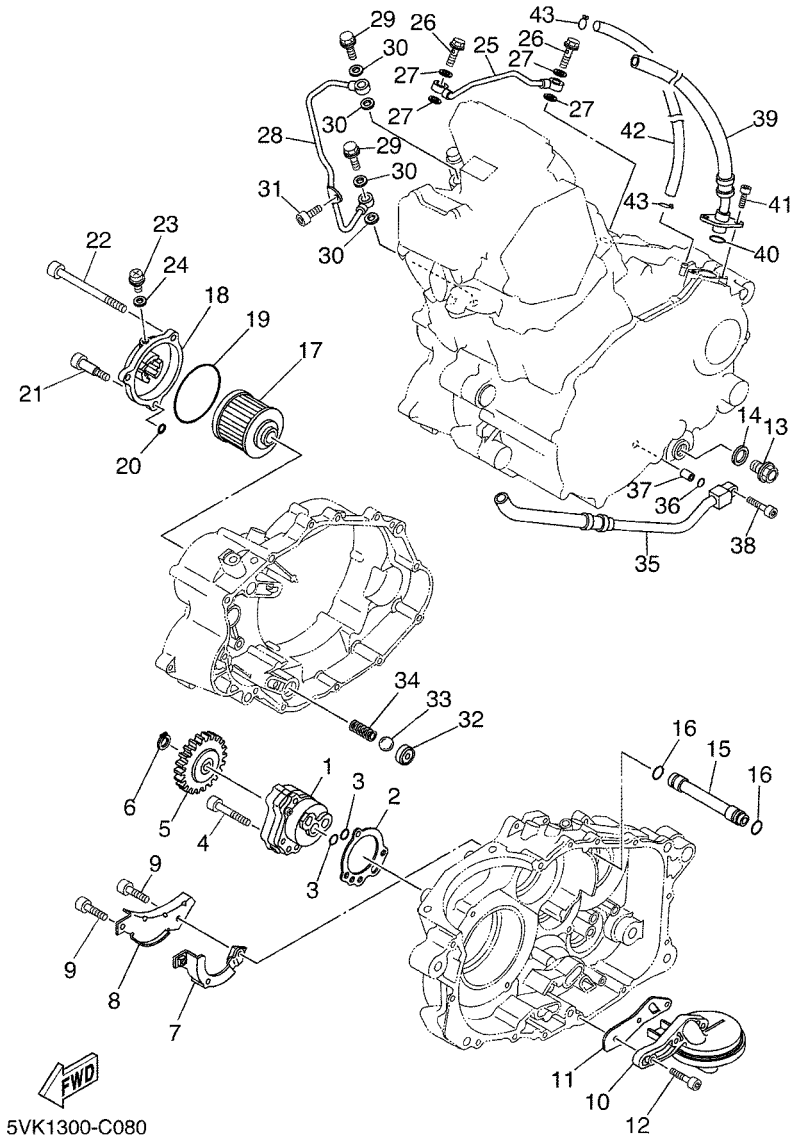


## FIG. 8 BOMBA DE ACEITE

| REF. Nº | CODIGO Nº | DESCRIPCION | 01 | 02 | 03 | 04 | 05 | OBSERVACIONES |
|---|---|---|---|---|---|---|---|---|
| 28 | 5VK–13171–00 | TUBO CONDUCTOR 2 | 1 | 1 | 1 | 1 | 1 | |
| 29 | 90401–10096 | PERNO DE UNION | 2 | 2 | 2 | 2 | 2 | |
| 30 | 90430–10188 | JUNTA | 4 | 4 | 4 | 4 | 4 | |
| 31 | 91317–06012 | PERNO | 1 | 1 | 1 | 1 | 1 | |
| 32 | 583–13113–00 | ASIENTO BOLA RETENSORA | 1 | 1 | 1 | 1 | 1 | |
| 33 | 93503–08007 | ESFERA | 1 | 1 | 1 | 1 | 1 | |
| 34 | 90501–043E0 | RESORTE DE COMPRESION | 1 | 1 | 1 | 1 | 1 | |
| 35 | 5VK–13464–00 | MANGUERA DE ACEITE 1 | 1 | 1 | 1 | 1 | 1 | |
| 36 | 93210–10197 | ANILLO O | 1 | 1 | 1 | 1 | 1 | |
| 37 | 91810–14X00 | PASADOR DE CLAVIJA | 1 | 1 | 1 | 1 | 1 | |
| 38 | 91317–06025 | PERNO | 1 | 1 | 1 | 1 | 1 | |
| 39 | 5VK–13465–00 | MANGUERA DE ACEITE 2 | 1 | 1 | 1 | 1 | 1 | |
| 40 | 93210–15171 | ANILLO O | 1 | 1 | 1 | 1 | 1 | |
| 41 | 91317–06016 | PERNO | 2 | 2 | 2 | 2 | 2 | |
| 42 | 90445–11033 | TUBO | 1 | 1 | 1 | 1 | 1 | |
| 43 | 90467–10008 | PRESILLA | 1 | 1 | 1 | 1 | 1 | |

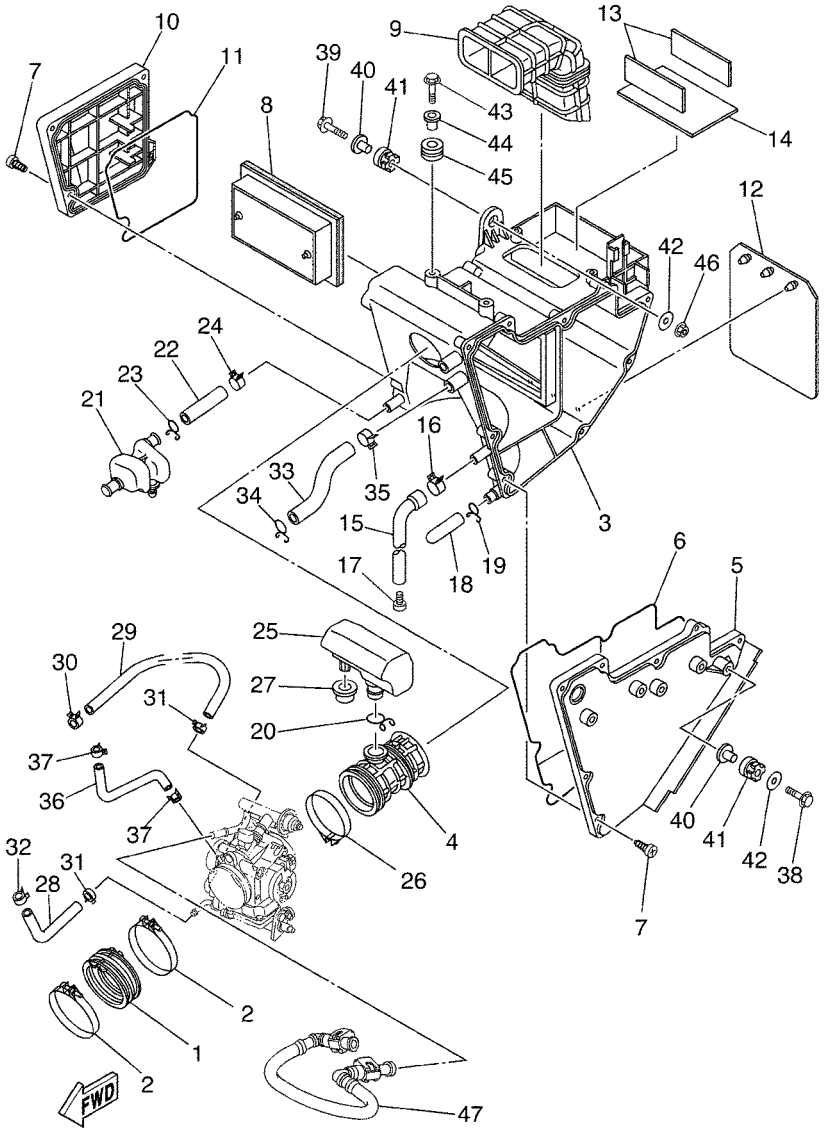


## FIG. 9 ADMISION

| REF. Nº | CODIGO Nº | DESCRIPCION | 01 | 02 | 03 | 04 | 05 | OBSERVACIONES |
|---|---|---|---|---|---|---|---|---|
| 1 | 5VK–13586–00 | TOBERA DE CARBURADOR 1 | 1 | 1 | 1 | 1 | 1 | |
| 2 | 90450–72001 | BRIDA, MANGUERA | 2 | 2 | 2 | 2 | 2 | |
| 3 | 5VK–E4411–00 | CAJA FILTRO DEL AIRE 1 | 1 | 1 | 1 | 1 | 1 | |
| 4 | 5VK–E4453–00 | UNION DEL FILTRO DEL AIRE 1 | 1 | 1 | 1 | 1 | 1 | |
| 5 | 5VK–E441A–00 | CUBIERTA DE CAJA FILTRO 1 | 1 | 1 | 1 | 1 | 1 | |
| 6 | 5VK–E4452–00 | SELLO | 1 | 1 | 1 | 1 | 1 | |
| 7 | 9770M–50025 | TORNILLO ROSCA HEMBRA | 13 | 13 | 13 | 13 | 13 | |
| 8 | 5VK–E4451–00 | ELEMENTO DEL FILTRO DEL AIRE | 1 | 1 | 1 | 1 | 1 | |
| 9 | 5VK–E4437–00 | CONDUCTO | 1 | 1 | 1 | 1 | 1 | |
| 10 | 5VK–E441E–00 | CUBIERTA DE CAJA DE FILTRO 2 | 1 | 1 | 1 | 1 | 1 | |
| 11 | 5VK–E4457–00 | SELLO | 1 | 1 | 1 | 1 | 1 | |
| 12 | 5VK–F1621–00 | CHARNELA | 1 | 1 | 1 | 1 | 1 | |
| 13 | 5VK–H2121–00 | BASE DE BATERIA | 2 | 2 | 2 | 2 | 2 | |
| 14 | 5VK–H2122–00 | ASIENTO DE BATERIA | 1 | 1 | 1 | 1 | 1 | |
| 15 | 5VK–E443E–00 | TUBO, DRENAJE | 1 | 1 | 1 | 1 | 1 | |
| 16 | 90467–13062 | PRESILLA | 1 | 1 | 1 | 1 | 1 | |
| 17 | 90338–08801 | TAPON | 1 | 1 | 1 | 1 | 1 | |
| 18 | 5LW–E443E–00 | TUBO, DRENAJE | 1 | 1 | 1 | 1 | 1 | |
| 19 | 90467–12800 | PRESILLA | 1 | 1 | 1 | 1 | 1 | |
| 20 | 90467–23800 | PRESILLA | 1 | 1 | 1 | 1 | 1 | |
| 21 | 5VK–E5371–00 | RESPIRADERO | 1 | 1 | 1 | 1 | 1 | |
| 22 | 5VK–E1167–00 | CUBIERTA RESPIRADERO 2 | 1 | 1 | 1 | 1 | 1 | |
| 23 | 90467–14800 | PRESILLA | 1 | 1 | 1 | 1 | 1 | |
| 24 | 90467–17801 | PRESILLA | 1 | 1 | 1 | 1 | 1 | |
| 25 | 5VK–E3591–00 | CAMARA DE AIRE | 1 | 1 | 1 | 1 | 1 | |
| 26 | 90450–59001 | BRIDA, MANGUERA | 1 | 1 | 1 | 1 | 1 | |
| 27 | 90480–20566 | TAPON | 1 | 1 | 1 | 1 | 1 | |

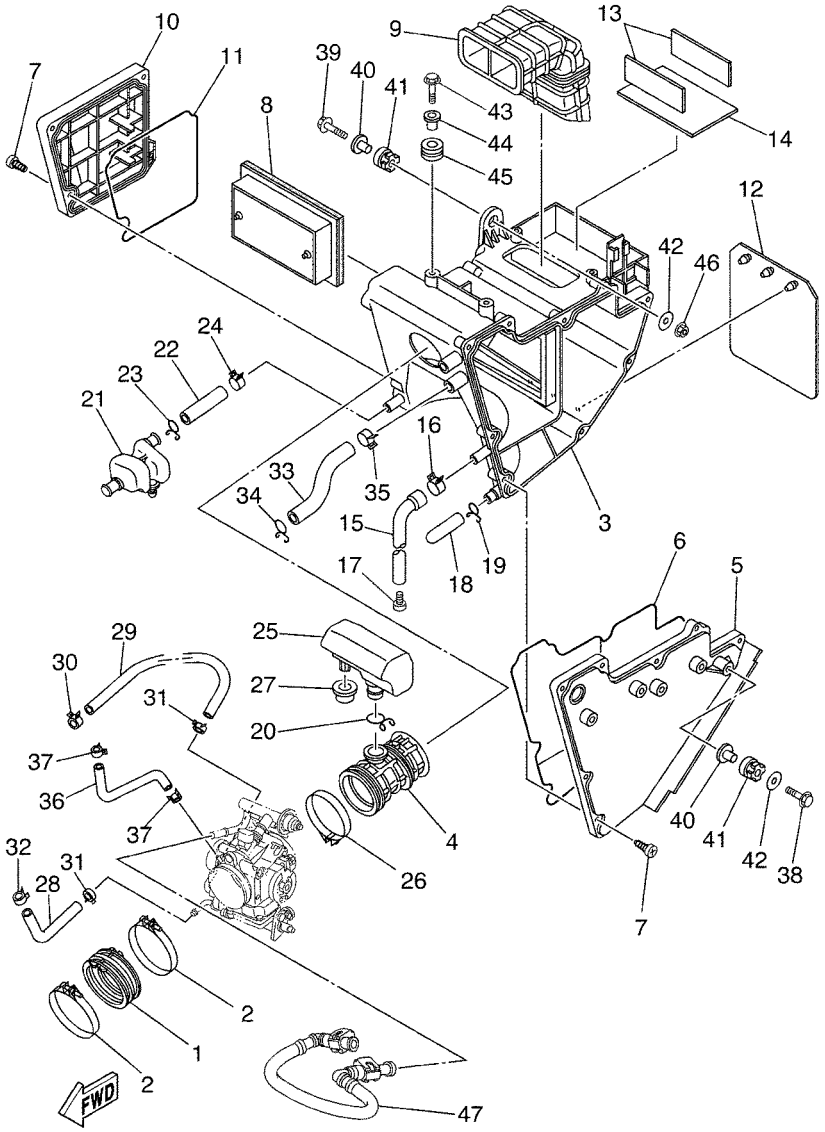


## FIG. 9 ADMISION

| REF. Nº | CODIGO Nº | DESCRIPCION | 01 | 02 | 03 | 04 | 05 | OBSERVACIONES |
|---|---|---|---|---|---|---|---|---|
| 28 | 5VK–E243A–10 | TUBO 1 | 1 | 1 | 1 | 1 | 1 | |
| 29 | 90445–12004 | TUBO | 1 | 1 | 1 | 1 | 1 | |
| 30 | 90467–11090 | PRESILLA | 1 | 1 | 1 | 1 | 1 | |
| 31 | 90467–11108 | PRESILLA | 2 | 2 | 2 | 2 | 2 | |
| 32 | 90467–11108 | PRESILLA | 1 | 1 | 1 | 1 | 1 | |
| 33 | 5VK–E3545–00 | SELLO | 1 | 1 | 1 | 1 | 1 | |
| 34 | 90467–170A2 | PRESILLA | 1 | 1 | 1 | 1 | 1 | |
| 35 | 90467–17128 | PRESILLA | 1 | 1 | 1 | 1 | 1 | |
| 36 | 5VK–13542–00 | MANGUERA, DE VACIO 1 | 1 | 1 | 1 | 1 | 1 | |
| 37 | 90467–07138 | PRESILLA | 2 | 2 | 2 | 2 | 2 | |
| 38 | 95827–06025 | TORNILLO | 1 | 1 | 1 | 1 | 1 | |
| 39 | 95827–06030 | TORNILLO | 1 | 1 | 1 | 1 | 1 | |
| 40 | 90387–075H4 | ESPACIADOR | 2 | 2 | 2 | 2 | 2 | |
| 41 | 90480–15001 | TAPON | 2 | 2 | 2 | 2 | 2 | |
| 42 | 90201–064K6 | ARANDELA PLANA | 2 | 2 | 2 | 2 | 2 | |
| 43 | 95827–06020 | TORNILLO | 2 | 2 | 2 | 2 | 2 | |
| 44 | 90387–07037 | ESPACIADOR | 2 | 2 | 2 | 2 | 2 | |
| 45 | 90480–18276 | TAPON | 2 | 2 | 2 | 2 | 2 | |
| 46 | 95704–06500 | TUERCA DE BRIDA | 1 | 1 | 1 | 1 | 1 | |
| 47 | 5VK–13971–00 | ANILLO DE ESPACIADOR | 1 | 1 | 1 | 1 | 1 | |

## FIG. 10 ADMISION 2

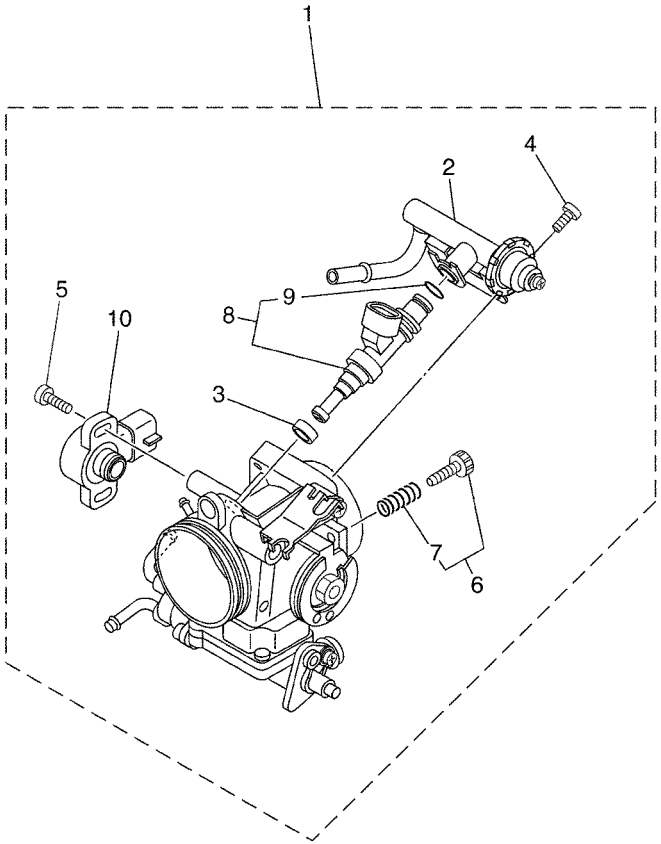

5VK1300-C100

| REF. Nº | CODIGO Nº | DESCRIPCION | 01 | 02 | 03 | 04 | 05 | OBSERVACIONES |
|---|---|---|---|---|---|---|---|---|
| 1 | 5VK–13750–00 | CAJA DE ACELERADOR COMPL. | 1 | 1 | 1 | 1 | 1 | |
| 2 | 5VK–13160–00 | .TUBO DE LLEGADA CONJUNTO 1 | 1 | 1 | 1 | 1 | 1 | |
| 3 | 90430–09002 | .JUNTA | 1 | 1 | 1 | 1 | 1 | |
| 4 | 98507–06012 | .TORNILLO DE CABEZA PLANA | 2 | 2 | 2 | 2 | 2 | |
| 5 | 8CC–14216–10 | .TORNILLO | 2 | 2 | 2 | 2 | 2 | |
| 6 | 5VK–14503–00 | .CARBURADOR COMPL. | 1 | 1 | 1 | 1 | 1 | |
| 7 | 5VK–14531–00 | ..RESORTE TORNILLO AJUSTE | 1 | 1 | 1 | 1 | 1 | |
| 8 | 5VK–13761–00 | .INYECTOR | 1 | 1 | 1 | 1 | 1 | |
| 9 | 5PS–14147–00 | ..ANILLO O | 1 | 1 | 1 | 1 | 1 | |
| 10 | 5PS–85885–00 | .TERMICA SENSORIO | 1 | 1 | 1 | 1 | 1 | |

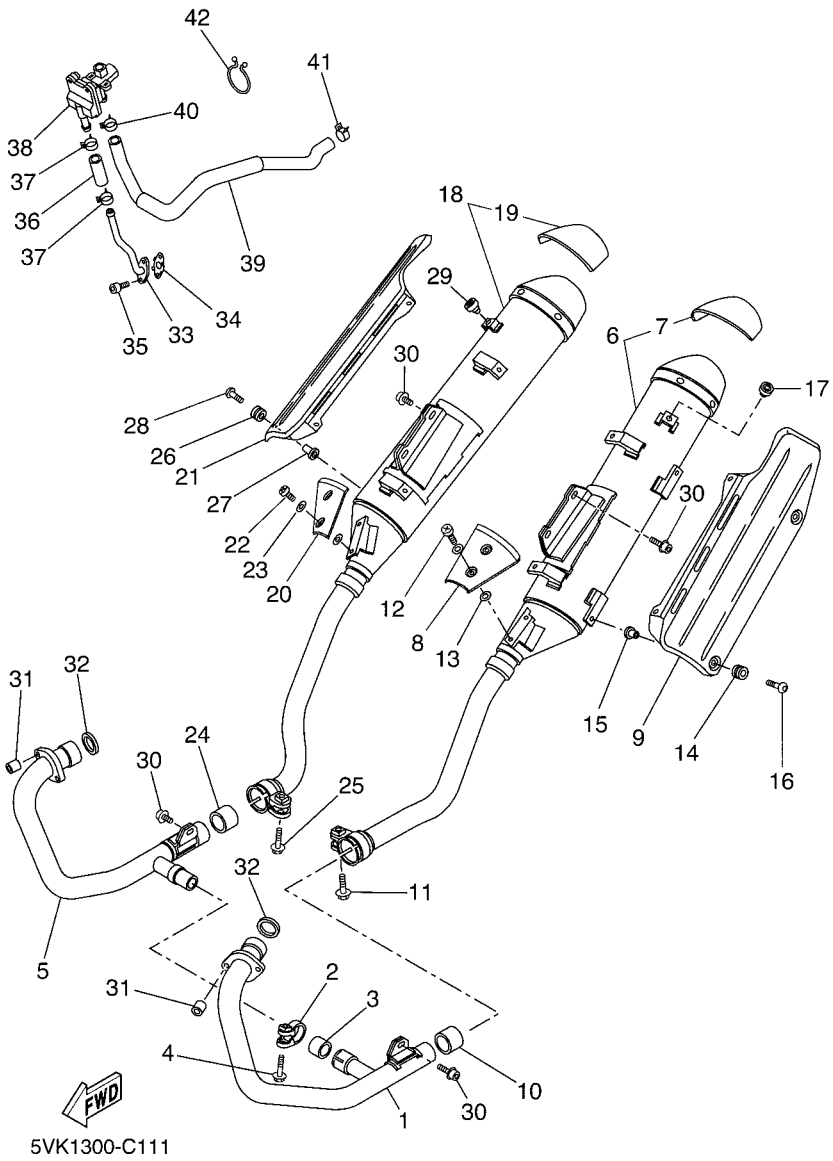


## FIG. 11 DESCARGA

| REF. Nº | CODIGO Nº | DESCRIPCION | 01 | 02 | 03 | 04 | 05 | OBSERVACIONES |
|---|---|---|---|---|---|---|---|---|
| 1 | 5VK–E4611–00 | TUBO DE ESCAPE 1 | 1 | 1 | 1 | 1 | 1 | |
| 2 | 5JX–14725–00 | BANDA DE SILENCIADOR | 1 | 1 | 1 | 1 | 1 | |
| 3 | 4FU–14714–00 | EMPAQUE DE SILENCIADOR | 1 | 1 | 1 | 1 | 1 | |
| 4 | 95814–08035 | TORNILLO | 1 | 1 | 1 | 1 | 1 | |
| 5 | 5VK–E4621–00 | TUBO DE ESCAPE 2 | 1 | 1 | 1 | 1 | 1 | |
| 6 | 5VK–E4711–00 | SILENCIADOR 1 | 1 | 1 | 1 | 1 | 1 | |
| 7 | 5VK–W1473–00 | .PROTECTOR, DE SILENCIADOR 1 | 1 | 1 | 1 | 1 | 1 | |
| 8 | 5VK–E4718–00 | PROTECTOR DE SILENCIADOR 1 | 1 | 1 | 1 | 1 | 1 | |
| 9 | 5VK–E4728–00 | PROTECTOR DE SILENCIADOR | 1 | 1 | 1 | 1 | 1 | LIGHT GREY |
| 10 | 4EL–14714–00 | EMPAQUE DE SILENCIADOR | 1 | 1 | 1 | 1 | 1 | |
| 11 | 95024–08040 | PERNO, DE BRIDA | 1 | 1 | 1 | 1 | 1 | |
| 12 | 98980–06012 | TORNILLO DE LIGAR | 2 | 2 | 2 | 2 | 2 | |
| 13 | 90201–05015 | ARANDELA PLANA | 4 | 4 | 4 | 4 | 4 | |
| 14 | 90480–12581 | TAPON | 4 | 4 | 4 | 4 | 4 | |
| 15 | 90387–06023 | ESPACIADOR | 4 | 4 | 4 | 4 | 4 | |
| 16 | 90149–06280 | TORNILLO DE REGLAJE | 4 | 4 | 4 | 4 | 4 | |
| 17 | 22W–24181–00 | AMORTIGUADOR DE MONTAJE 1 | 1 | 1 | 1 | 1 | 1 | |
| 18 | 5VK–E4721–00 | SILENCIADOR 2 | 1 | 1 | 1 | 1 | 1 | |
| 19 | 5VK–W1473–00 | .PROTECTOR, DE SILENCIADOR 1 | 1 | 1 | 1 | 1 | 1 | |
| 20 | 5VK–E4738–00 | PROTECTOR DE SILENCIADOR 3 | 1 | 1 | 1 | 1 | 1 | |
| 21 | 5VK–E4748–00 | PROTECTOR DE SILENCIADOR 4 | 1 | 1 | 1 | 1 | 1 | LIGHT GREY |
| 22 | 98980–06012 | TORNILLO DE LIGAR | 2 | 2 | 2 | 2 | 2 | |
| 23 | 90201–05015 | ARANDELA PLANA | 4 | 4 | 4 | 4 | 4 | |
| 24 | 4EL–14714–00 | EMPAQUE DE SILENCIADOR | 1 | 1 | 1 | 1 | 1 | |
| 25 | 95024–08040 | PERNO, DE BRIDA | 1 | 1 | 1 | 1 | 1 | |
| 26 | 90480–12581 | TAPON | 4 | 4 | 4 | 4 | 4 | |
| 27 | 90387–06023 | ESPACIADOR | 4 | 4 | 4 | 4 | 4 | |

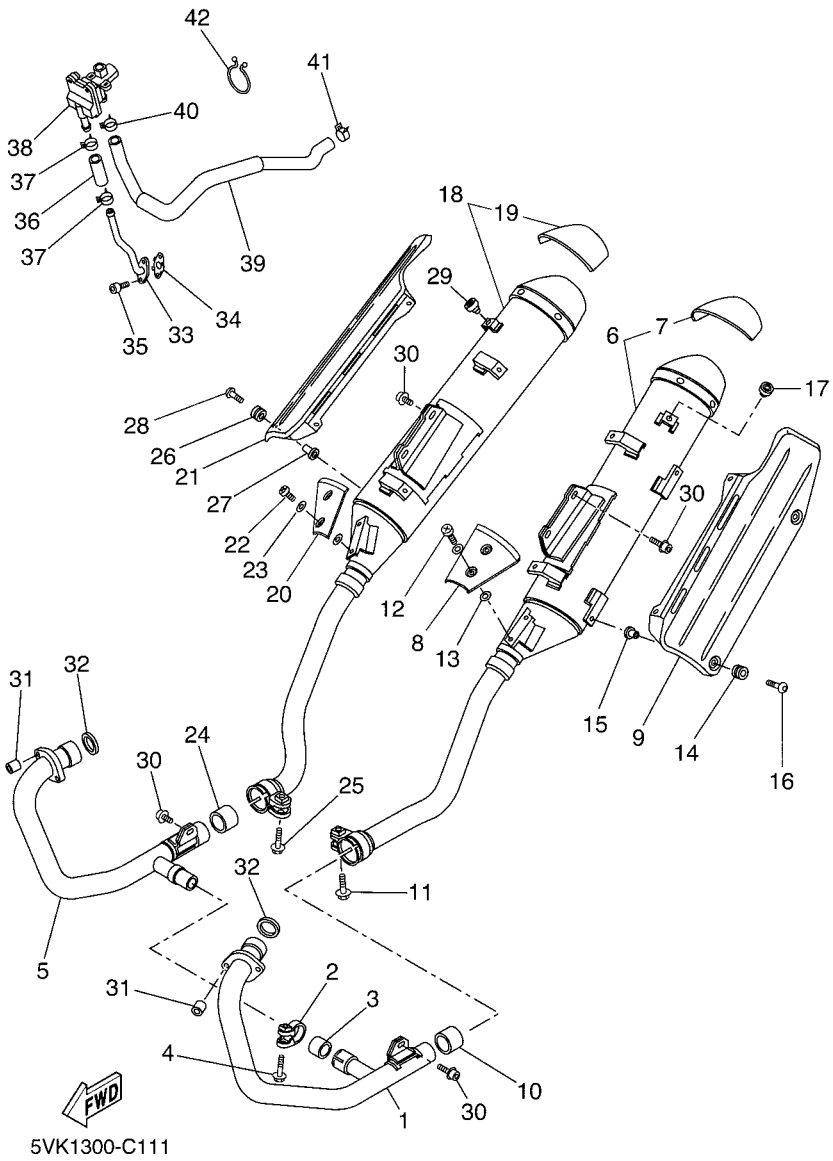


## FIG. 11 DESCARGA

| REF. Nº | CODIGO Nº | DESCRIPCION | 01 | 02 | 03 | 04 | 05 | OBSERVACIONES |
|---|---|---|---|---|---|---|---|---|
| 28 | 90149–06280 | TORNILLO DE REGLAJE | 4 | 4 | 4 | 4 | 4 | |
| 29 | 22W–24181–00 | AMORTIGUADOR DE MONTAJE 1 | 1 | 1 | 1 | 1 | 1 | |
| 30 | 90109–085E2 | PERNO | 6 | 6 | 6 | 6 | 6 | |
| 31 | 90179–08442 | TUERCA | 4 | 4 | 4 | 4 | 4 | |
| 32 | 3YF–14613–01 | JUNTA, TUBO DE ESCAPE | 2 | 2 | 2 | 2 | 2 | |
| 33 | 5VK–14871–01 | TUBO DE COMBUSTIBLE | 1 | 1 | 1 | 1 | 1 | |
| 34 | 5VK–14815–00 | EMPAQUE | 1 | 1 | 1 | 1 | 1 | |
| 35 | 91380–06016 | PERNO | 2 | 2 | 2 | 2 | 2 | |
| 36 | 5VK–14881–00 | TUBO 1 | 1 | 1 | 1 | 1 | 1 | |
| 37 | 90467–17089 | PRESILLA | 2 | 2 | 2 | 2 | 2 | |
| 38 | 5VK–14803–00 | VALVULA DE AIRE COMPLETA | 1 | 1 | 1 | 1 | 1 | |
| 39 | 5VK–E4882–00 | TUBO 2 | 1 | 1 | 1 | 1 | 1 | |
| 40 | 90467–17089 | PRESILLA | 1 | 1 | 1 | 1 | 1 | |
| 41 | 90467–170A0 | PRESILLA | 1 | 1 | 1 | 1 | 1 | |
| 42 | 90464–37257 | BRIDA | 2 | 2 | 2 | 2 | 2 | |

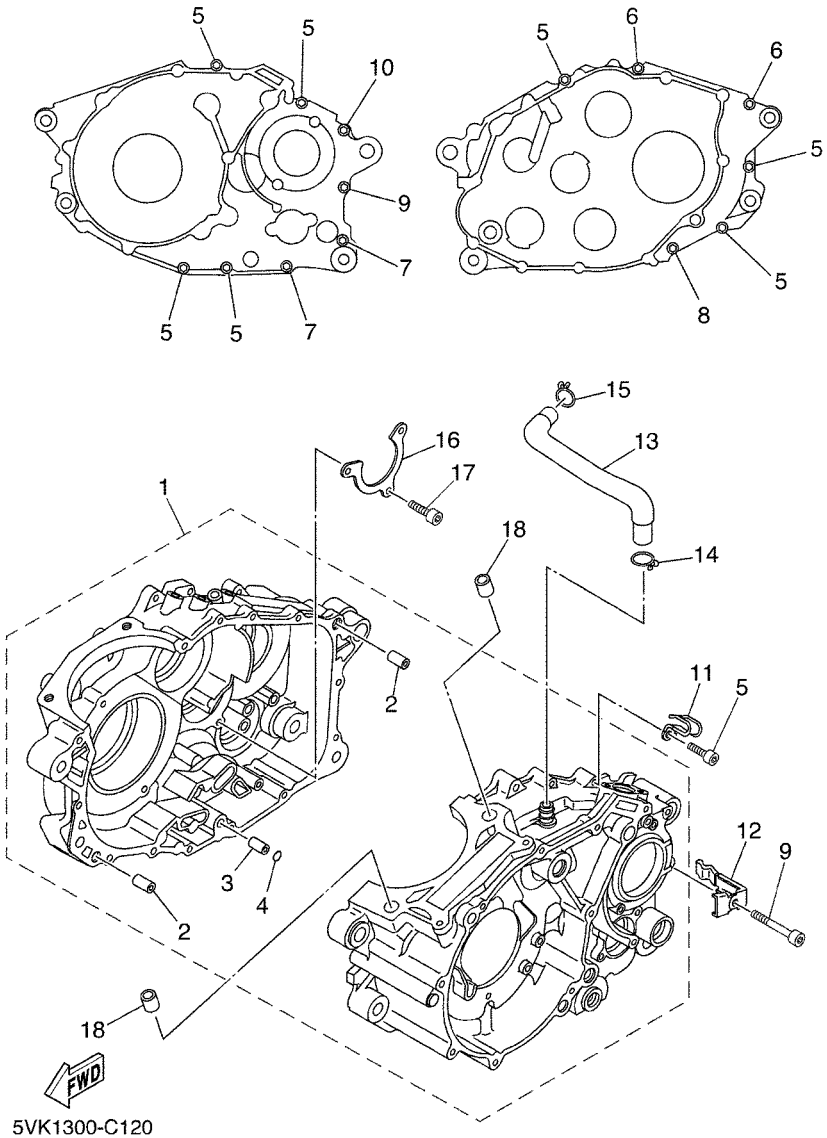


## FIG. 12 CARTER

| REF. Nº | CODIGO Nº | DESCRIPCION | 01 | 02 | 03 | 04 | 05 | OBSERVACIONES |
|---|---|---|---|---|---|---|---|---|
| 1 | 5VK–E5100–00 | CARTER COMPLETO | 1 | 1 | 1 | 1 | 1 | |
| 2 | 99530–12016 | .PASADOR, DE ESPIGA | 2 | 2 | 2 | 2 | 2 | |
| 3 | 91808–16X00 | .PASADOR DE CLAVIJA | 1 | 1 | 1 | 1 | 1 | |
| 4 | 93210–07X01 | .ANILLO O | 1 | 1 | 1 | 1 | 1 | |
| 5 | 91317–06030 | PERNO | 7 | 7 | 7 | 7 | 7 | |
| 6 | 91317–06045 | PERNO | 2 | 2 | 2 | 2 | 2 | |
| 7 | 91317–06055 | PERNO | 2 | 2 | 2 | 2 | 2 | |
| 8 | 91317–06060 | PERNO | 1 | 1 | 1 | 1 | 1 | |
| 9 | 91317–06080 | PERNO | 1 | 1 | 1 | 1 | 1 | |
| 10 | 91317–06090 | PERNO | 1 | 1 | 1 | 1 | 1 | |
| 11 | 90462–06012 | BRIDA | 1 | 1 | 1 | 1 | 1 | |
| 12 | 90465–12013 | BRIDA | 1 | 1 | 1 | 1 | 1 | |
| 13 | 5VK–11166–00 | TUBO RESPIRADERO 1 | 1 | 1 | 1 | 1 | 1 | |
| 14 | 90467–14015 | PRESILLA | 1 | 1 | 1 | 1 | 1 | |
| 15 | 90467–14015 | PRESILLA | 1 | 1 | 1 | 1 | 1 | |
| 16 | 5VK–E5383–00 | PLACA CUBIERTA DE ENGRANAJE | 1 | 1 | 1 | 1 | 1 | |
| 17 | 91317–06016 | PERNO | 3 | 3 | 3 | 3 | 3 | |
| 18 | 99530–14016 | PASADOR, DE ESPIGA | 2 | 2 | 2 | 2 | 2 | |

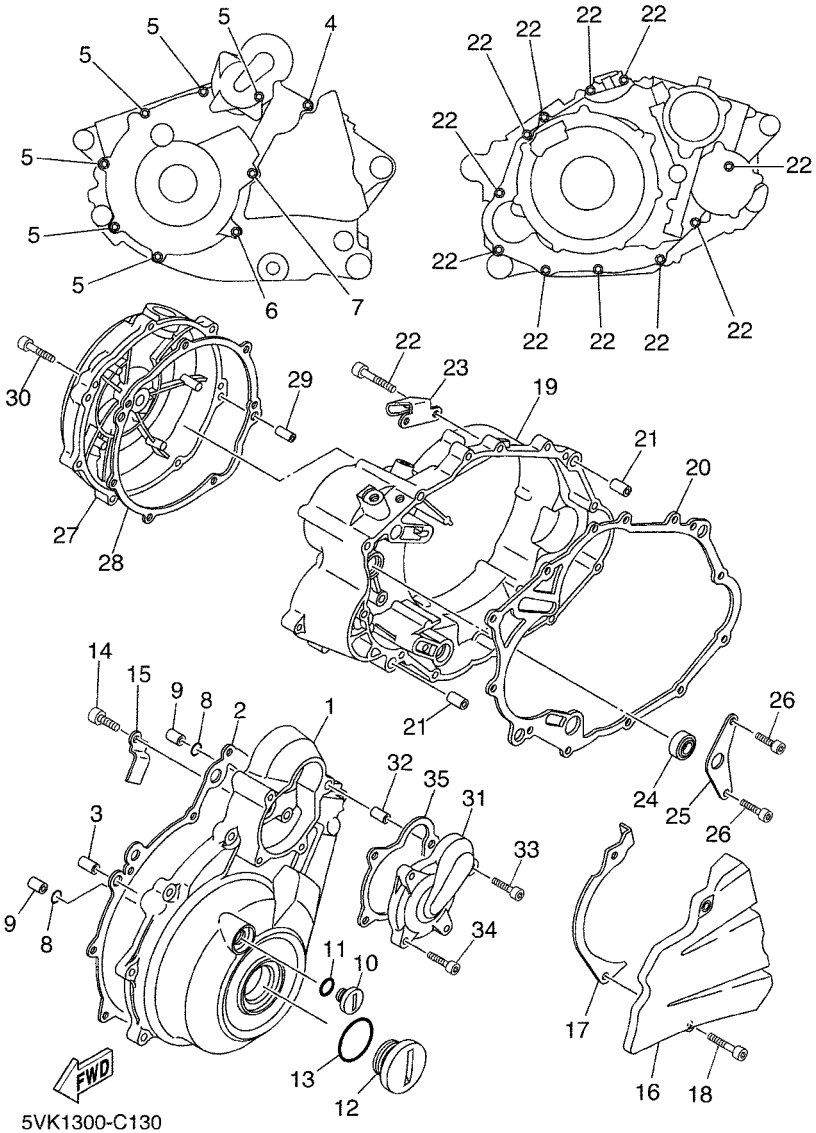


## FIG. 13 CUBIERTA DE CARTER 1

| REF. Nº | CODIGO Nº | DESCRIPCION | 01 | 02 | 03 | 04 | 05 | OBSERVACIONES |
|---|---|---|---|---|---|---|---|---|
| 1 | 5VK–WE541–00 | CUBIERA DE CARTER COMPLETE 1 | 1 | 1 | 1 | 1 | 1 | |
| 2 | 5VK–E5451–00 | EMPAQ DE CUBIERTA DE CARTER | 1 | 1 | 1 | 1 | 1 | |
| 3 | 99530–12016 | PASADOR, DE ESPIGA | 2 | 2 | 2 | 2 | 2 | |
| 4 | 91317–06035 | PERNO | 1 | 1 | 1 | 1 | 1 | |
| 5 | 91317–06025 | PERNO | 6 | 6 | 6 | 6 | 6 | |
| 6 | 91317–06050 | PERNO | 1 | 1 | 1 | 1 | 1 | |
| 7 | 91317–06050 | PERNO | 1 | 1 | 1 | 1 | 1 | |
| 8 | 93210–13X00 | ANILLO O | 2 | 2 | 2 | 2 | 2 | |
| 9 | 99530–12016 | PASADOR, DE ESPIGA | 2 | 2 | 2 | 2 | 2 | |
| 10 | 90340–14X00 | TORNILLO, DE DRENAJE | 1 | 1 | 1 | 1 | 1 | |
| 11 | 93210–14X00 | ANILLO O | 1 | 1 | 1 | 1 | 1 | |
| 12 | 90340–36X00 | TORNILLO, DE DRENAJE | 1 | 1 | 1 | 1 | 1 | |
| 13 | 93210–35X00 | ANILLO O | 1 | 1 | 1 | 1 | 1 | |
| 14 | 91317–06012 | PERNO | 1 | 1 | 1 | 1 | 1 | |
| 15 | 90462–16X00 | BRIDA | 1 | 1 | 1 | 1 | 1 | |
| 16 | 5VK–E5421–00 | TAPA DE CARTER DERECHA | 1 | 1 | 1 | 1 | 1 | |
| 17 | 5VK–E7466–00 | GUIA DE CADENA | 1 | 1 | 1 | 1 | 1 | |
| 18 | 91317–06025 | PERNO | 2 | 2 | 2 | 2 | 2 | |
| 19 | 5VK–E5431–00 | CUBIERTA DE CARTER 3 | 1 | 1 | 1 | 1 | 1 | |
| 20 | 5VK–E5462–00 | EMPAQ CUBIERTA DE CARTER 3 | 1 | 1 | 1 | 1 | 1 | |
| 21 | 99530–12016 | PASADOR, DE ESPIGA | 2 | 2 | 2 | 2 | 2 | |
| 22 | 91317–06030 | PERNO | 11 | 11 | 11 | 11 | 11 | |
| 23 | 5VK–E5441–00 | SOSTEN DE CABLE DE EMBRAGUE | 1 | 1 | 1 | 1 | 1 | |
| 24 | 93101–14164 | SELLO ACEITE | 1 | 1 | 1 | 1 | 1 | |
| 25 | 5VK–E5118–00 | SOPORTE | 1 | 1 | 1 | 1 | 1 | |
| 26 | 91317–06012 | PERNO | 2 | 2 | 2 | 2 | 2 | |
| 27 | 5VK–E5416–00 | CUBIERTA DE BOMBA DE ACEITE | 1 | 1 | 1 | 1 | 1 | |

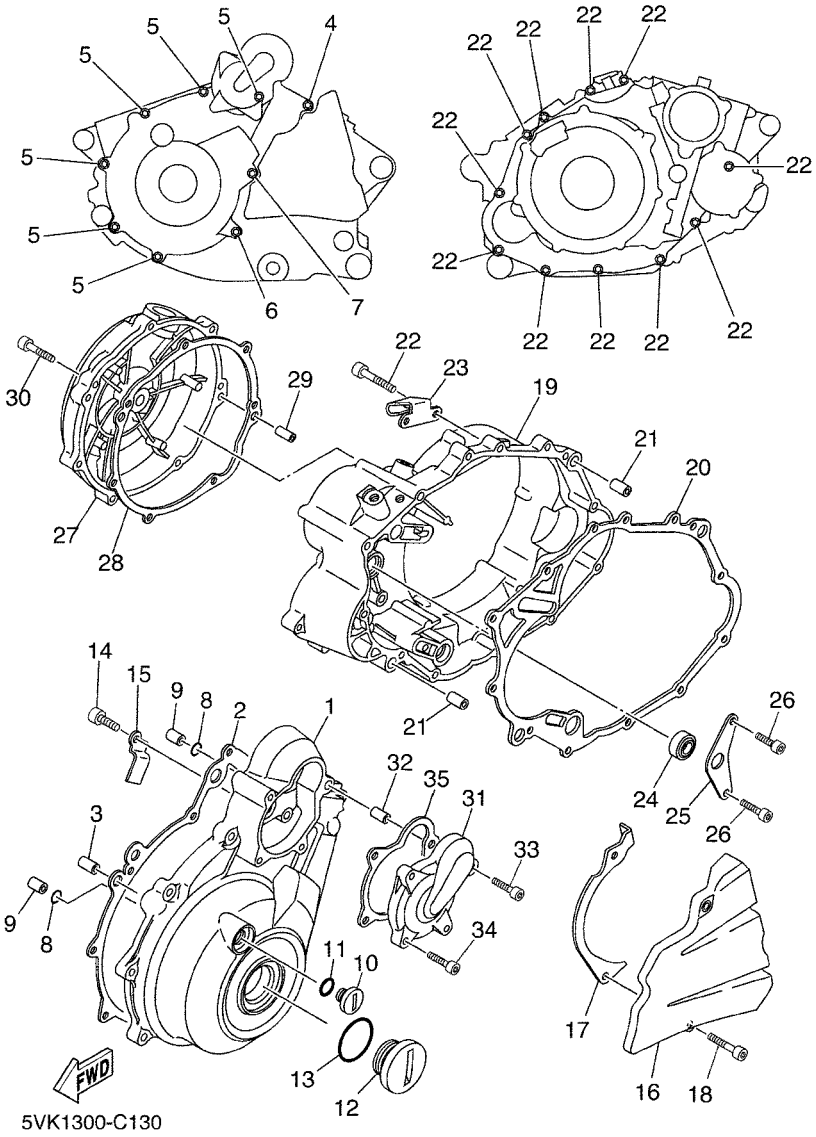


## FIG. 13 CUBIERTA DE CARTER 1

| REF. Nº | CODIGO Nº | DESCRIPCION | 01 | 02 | 03 | 04 | 05 | OBSERVACIONES |
|---|---|---|---|---|---|---|---|---|
| 28 | 5VK–E5453–00 | EMPAQ | 1 | 1 | 1 | 1 | 1 | |
| 29 | 91808–16X00 | PASADOR DE CLAVIJA | 2 | 2 | 2 | 2 | 2 | |
| 30 | 90105–06X20 | TORNILLO | 7 | 7 | 7 | 7 | 7 | |
| 31 | 5VK–WE544–00 | CUBIERTA DE GENERADOR COMP. | 1 | 1 | 1 | 1 | 1 | |
| 32 | 91808–16X00 | PASADOR DE CLAVIJA | 1 | 1 | 1 | 1 | 1 | |
| 33 | 91317–06035 | PERNO | 1 | 1 | 1 | 1 | 1 | |
| 34 | 91317–06025 | PERNO | 3 | 3 | 3 | 3 | 3 | |
| 35 | 5VK–15455–00 | EMPAQUE 1 | 1 | 1 | 1 | 1 | 1 | |

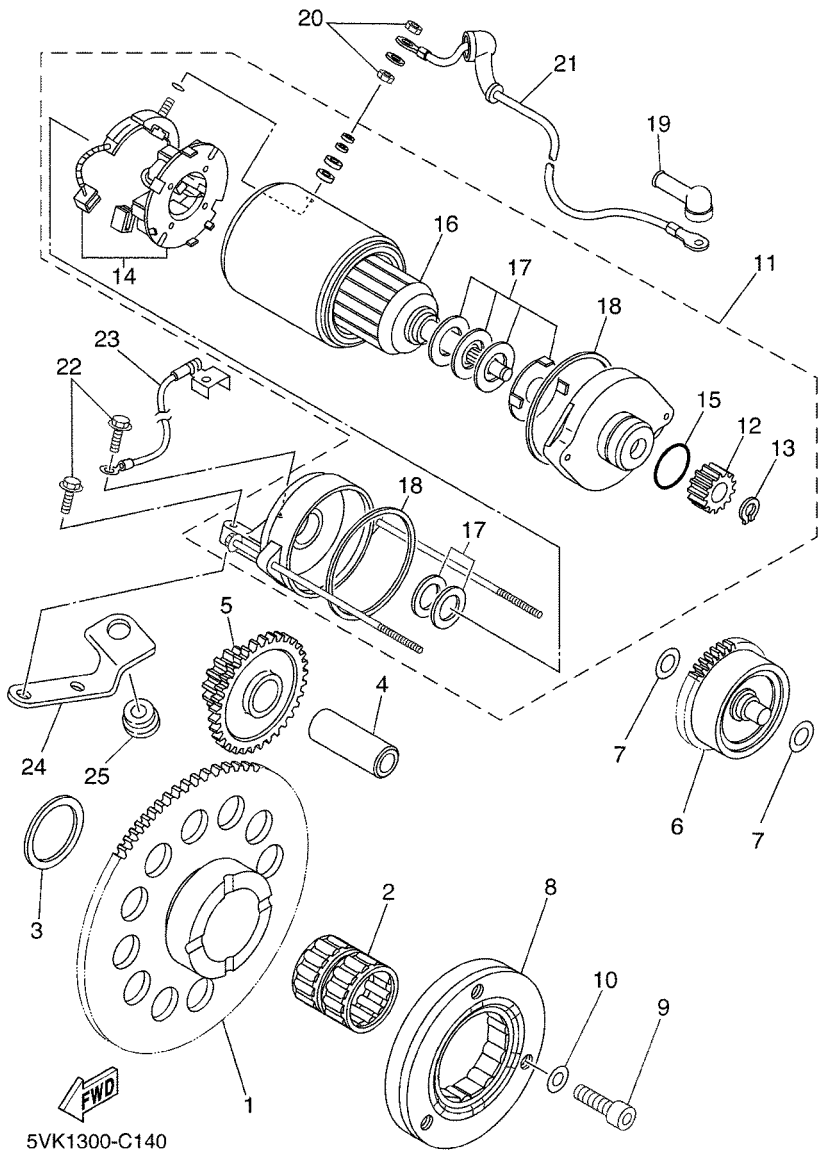


## FIG. 14 EMBRAGUE DEL ARRANQUE

| REF. Nº | CODIGO Nº | DESCRIPCION | 01 | 02 | 03 | 04 | 05 | OBSERVACIONES |
|---|---|---|---|---|---|---|---|---|
| 1 | 3YF–15515–00 | ENGRANAJE 3 | 1 | 1 | 1 | 1 | 1 | |
| 2 | 93310–530C7 | COJINETE DE RODILLOS | 1 | 1 | 1 | 1 | 1 | |
| 3 | 90201–30X01 | ARANDELA PLANA | 1 | 1 | 1 | 1 | 1 | |
| 4 | 5VK–E5522–00 | EJE 2 | 1 | 1 | 1 | 1 | 1 | |
| 5 | 5VK–15517–00 | ENGRENAJE POSICION 2DA | 1 | 1 | 1 | 1 | 1 | |
| 6 | 5VK–E5560–00 | AMORTIGUADOR | 1 | 1 | 1 | 1 | 1 | |
| 7 | 90201–08759 | ARANDELA PLANA | 2 | 2 | 2 | 2 | 2 | |
| 8 | 5VK–15590–00 | ENSAMBLE GUIA CADENA ARRANQUE | 1 | 1 | 1 | 1 | 1 | |
| 9 | 91317–08025 | PERNO | 3 | 3 | 3 | 3 | 3 | |
| 10 | 90201–08X18 | ARANDELA PLANA | 3 | 3 | 3 | 3 | 3 | |
| 11 | 3SX–81890–00 | MOTOR DE ARRANQUE COMPLETO | 1 | 1 | 1 | 1 | 1 | |
| 12 | 1VJ–15511–00 | .ENGRANAJE MOTOR ARRANQUE | 1 | 1 | 1 | 1 | 1 | |
| 13 | 93440–11024 | .SEGURO | 1 | 1 | 1 | 1 | 1 | |
| 14 | 3AJ–81801–00 | .JUEGO DE ESCOBILLA | 1 | 1 | 1 | 1 | 1 | |
| 15 | 1FK–81847–00 | .ANILLO GOMA | 1 | 1 | 1 | 1 | 1 | |
| 16 | 3AJ–81850–00 | .INDUCIDO COMPLETO | 1 | 1 | 1 | 1 | 1 | |
| 17 | 3AJ–81809–00 | .JUEGO DE ARANDELA | 1 | 1 | 1 | 1 | 1 | |
| 18 | 11H–81844–00 | .EMPAQUE | 2 | 2 | 2 | 2 | 2 | |
| 19 | 4G0–81871–00 | TAPA | 1 | 1 | 1 | 1 | 1 | |
| 20 | 4XV–8182A–00 | TUERCA | 2 | 2 | 2 | 2 | 2 | |
| 21 | 5VK–81815–00 | CABLE, MOTOR DE ARRANQUE | 1 | 1 | 1 | 1 | 1 | |
| 22 | 95817–06035 | TORNILLO | 2 | 2 | 2 | 2 | 2 | |
| 23 | 5VK–H2116–00 | CABLE CONDUCTOR NEGATIVO | 1 | 1 | 1 | 1 | 1 | |
| 24 | 5VK–15199–01 | SOPORTE | 1 | 1 | 1 | 1 | 1 | |
| 25 | 90480–13398 | TAPON | 1 | 1 | 1 | 1 | 1 | |

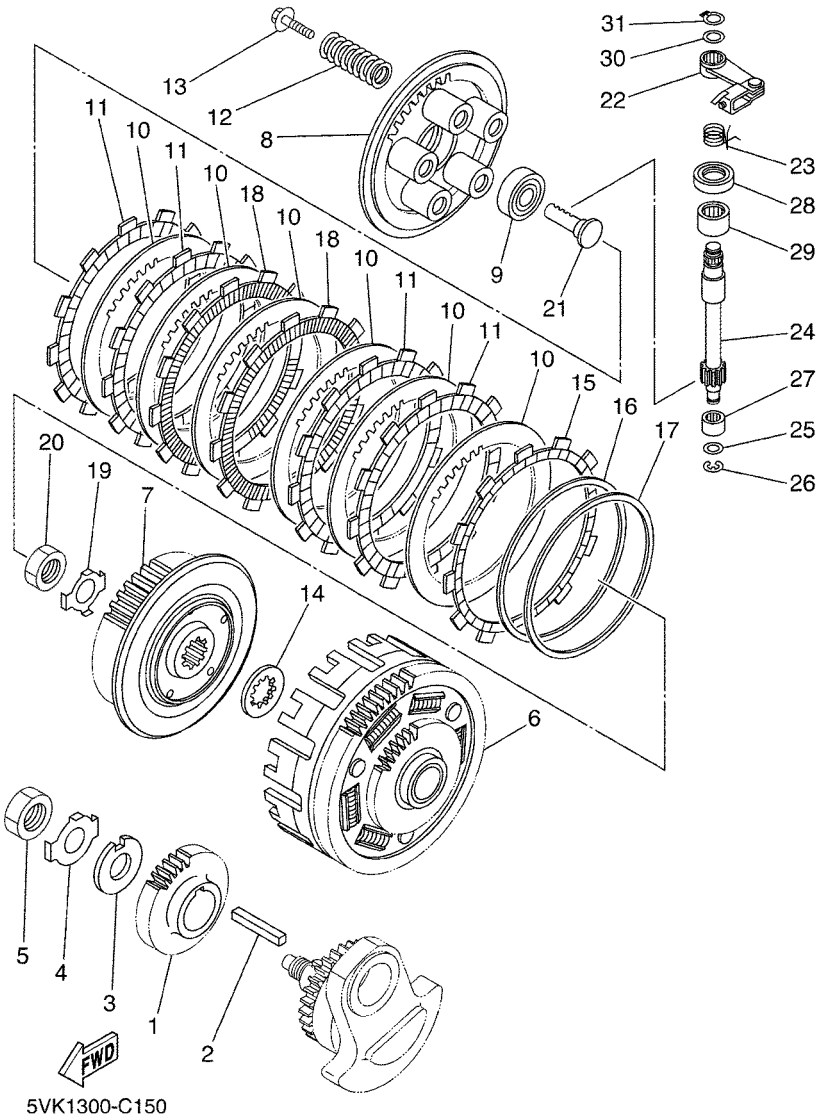


## FIG. 15 EMBRAGUE

| REF. Nº | CODIGO Nº | DESCRIPCION | 01 | 02 | 03 | 04 | 05 | OBSERVACIONES |
|---|---|---|---|---|---|---|---|---|
| 1 | 5VK–16111–00 | ENGRANAJE TRACC.PRIMARIA | 1 | 1 | 1 | 1 | 1 | |
| 2 | 90282–07001 | CHAVETA, RECTA | 1 | 1 | 1 | 1 | 1 | |
| 3 | 90209–20012 | ARANDELA DE SEPARACION | 1 | 1 | 1 | 1 | 1 | |
| 4 | 90215–20X00 | ARANDELA DE CIERRE | 1 | 1 | 1 | 1 | 1 | |
| 5 | 90170–20274 | TUERCA | 1 | 1 | 1 | 1 | 1 | |
| 6 | 5VK–16150–00 | CAMPANA DE EMBRAGUE | 1 | 1 | 1 | 1 | 1 | |
| 7 | 5VK–16371–00 | CUBO, DE EMBRAGUE | 1 | 1 | 1 | 1 | 1 | |
| 8 | 5VK–16351–00 | PLATO DE PRESION | 1 | 1 | 1 | 1 | 1 | |
| 9 | 93306–00304 | COJINETE | 1 | 1 | 1 | 1 | 1 | |
| 10 | 4X7–16325–00 | DISCO, DE EMBRAGUE | 6 | 6 | 6 | 6 | 6 | |
| 11 | 22U–16321–00 | PLACA DE FRICCION | 4 | 4 | 4 | 4 | 4 | |
| 12 | 90501–260A1 | RESORTE DE COMPRESION | 5 | 5 | 5 | 5 | 5 | |
| 13 | 90119–06105 | TORNILLO CON ARANDELA | 5 | 5 | 5 | 5 | 5 | |
| 14 | 2JN–16154–00 | ARANDELA, DE EMPUJE 1 | 1 | 1 | 1 | 1 | 1 | |
| 15 | 5VK–16331–00 | DISCO, DE FRICCION | 1 | 1 | 1 | 1 | 1 | |
| 16 | 5JG–16383–00 | RESORTE DE COPA DE EMBRAGUE | 1 | 1 | 1 | 1 | 1 | |
| 17 | 5JG–16384–00 | PLACA DE ASIENTO | 1 | 1 | 1 | 1 | 1 | |
| 18 | 5TA–16321–00 | PLACA DE FRICCION | 2 | 2 | 2 | 2 | 2 | |
| 19 | 90215–20X01 | ARANDELA DE CIERRE | 1 | 1 | 1 | 1 | 1 | |
| 20 | 90170–20327 | TUERCA | 1 | 1 | 1 | 1 | 1 | |
| 21 | 4XV–16356–01 | VARILLA DE EMPUJE 1 | 1 | 1 | 1 | 1 | 1 | |
| 22 | 5VK–16340–00 | PALANCA DE EMPUJE COMPLETA | 1 | 1 | 1 | 1 | 1 | |
| 23 | 90508–16016 | RESORTE DE TORSION | 1 | 1 | 1 | 1 | 1 | |
| 24 | 5EB–16382–00 | EJE DE PALANCA DE EMPUJE | 1 | 1 | 1 | 1 | 1 | |
| 25 | 92907–08600 | ARANDELA | 1 | 1 | 1 | 1 | 1 | |
| 26 | 99001–07600 | PRESILLA REDONDA | 1 | 1 | 1 | 1 | 1 | |
| 27 | 93317–11020 | COJINETE | 1 | 1 | 1 | 1 | 1 | |

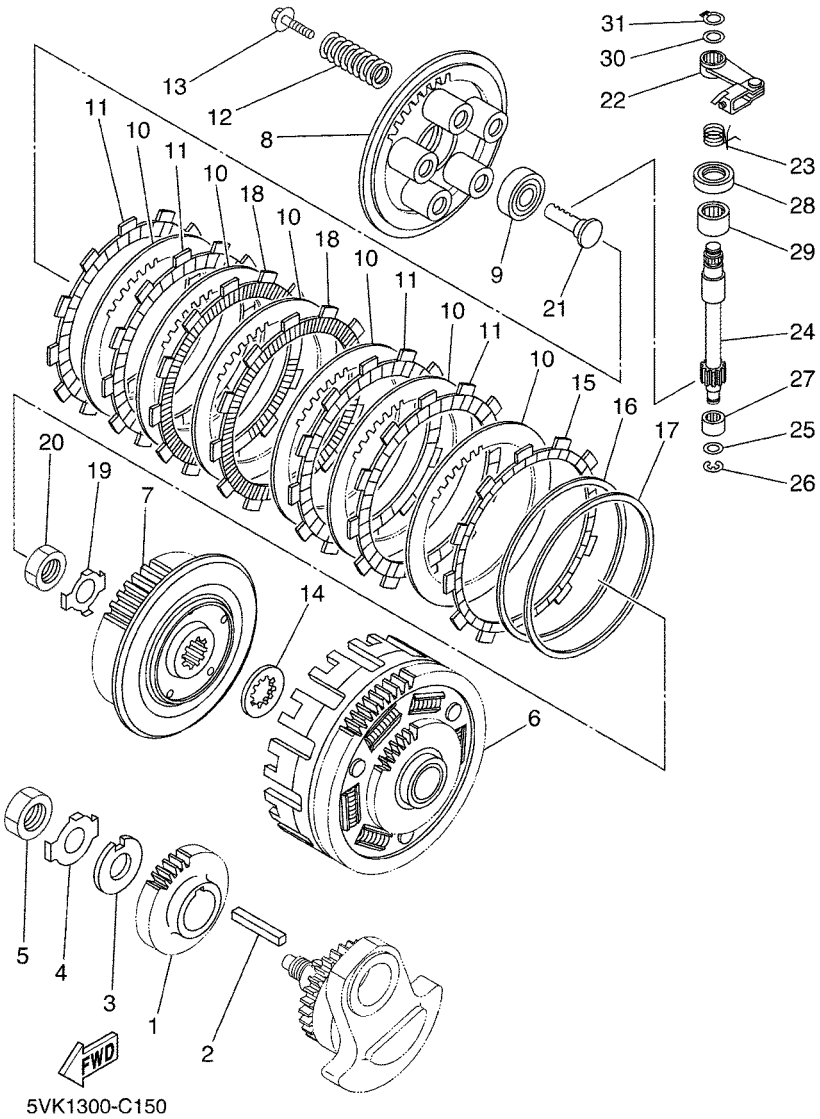


## FIG. 15 EMBRAGUE

| REF. Nº | CODIGO Nº | DESCRIPCION | 01 | 02 | 03 | 04 | 05 | OBSERVACIONES |
|---|---|---|---|---|---|---|---|---|
| 28 | 93102–15212 | SELLO ACEITE | 1 | 1 | 1 | 1 | 1 | |
| 29 | 93315–31502 | COJINETE DE RODILLOS | 1 | 1 | 1 | 1 | 1 | |
| 30 | 90201–10614 | ARANDELA PLANA | 1 | 1 | 1 | 1 | 1 | |
| 31 | 99009–10400 | PRESILLA REDONDA | 1 | 1 | 1 | 1 | 1 | |

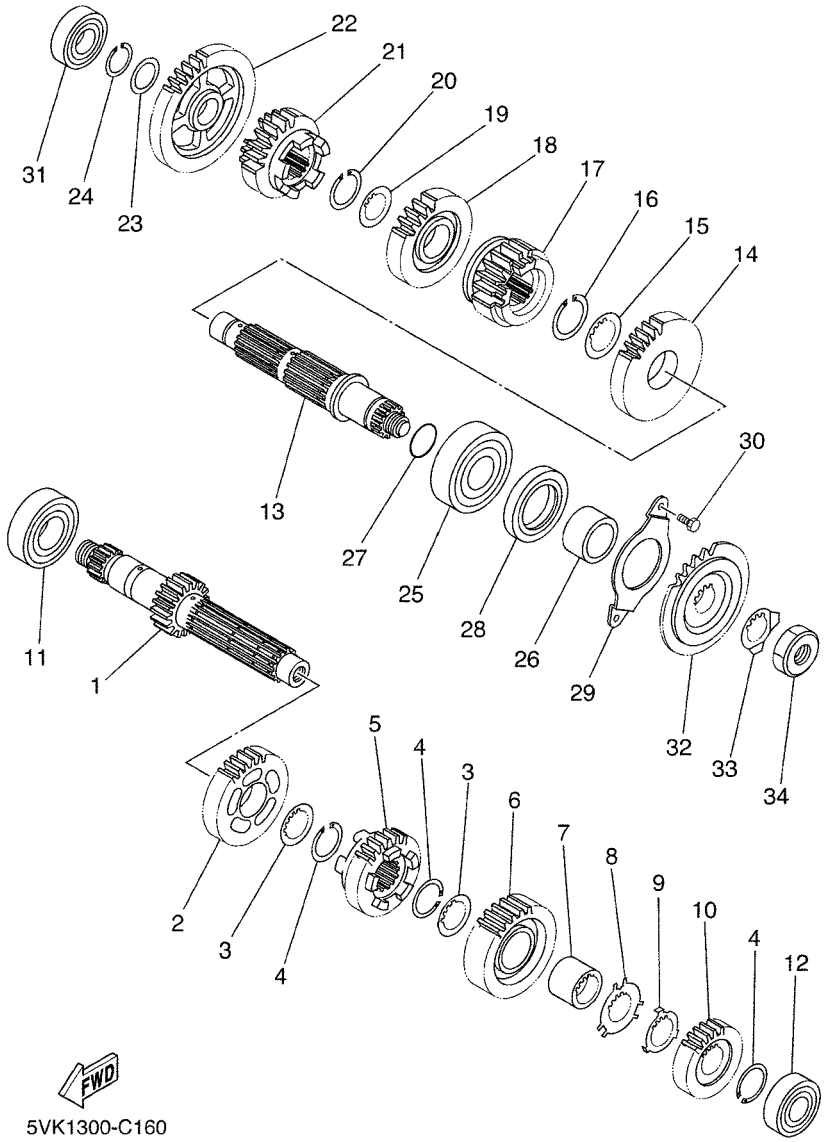


## FIG. 16 TRANSMISION

| REF. Nº | CODIGO Nº | DESCRIPCION | 01 | 02 | 03 | 04 | 05 | OBSERVACIONES |
|---|---|---|---|---|---|---|---|---|
| 1 | 5VK–E7401–00 | EJE PRINCIPAL COMPLETO | 1 | 1 | 1 | 1 | 1 | |
| 2 | 5VK–E7141–00 | ENGRANAJE PINON DE 4TA | 1 | 1 | 1 | 1 | 1 | AP |
| | 5VK–E7141–10 | ENGRANAJE PINON DE 4TA | 1 | 1 | 1 | 1 | 1 | AP |
| 3 | 90209–21X00 | ARANDELA DE SEPARACION | 2 | 2 | 2 | 2 | 2 | |
| 4 | 93440–25084 | SEGURO | 3 | 3 | 3 | 3 | 3 | |
| 5 | 5VK–E7131–00 | ENGRANAJE PINON DE 3RA | 1 | 1 | 1 | 1 | 1 | |
| 6 | 5VK–E7151–00 | ENGRANAJE PINON DE 5TA | 1 | 1 | 1 | 1 | 1 | AP |
| | 5VK–E7151–10 | ENGRANAJE PINON DE 5TA | 1 | 1 | 1 | 1 | 1 | AP |
| 7 | 90387–21002 | ESPACIADOR | 1 | 1 | 1 | 1 | 1 | |
| 8 | 90209–22X00 | ARANDELA DE SEPARACION | 1 | 1 | 1 | 1 | 1 | |
| 9 | 90209–21351 | ARANDELA DE SEPARACION | 1 | 1 | 1 | 1 | 1 | |
| 10 | 5VK–E7121–00 | ENGRANAJE DE PINON DE 2DA | 1 | 1 | 1 | 1 | 1 | |
| 11 | 93306–205XA | COJINETE | 1 | 1 | 1 | 1 | 1 | |
| 12 | 93306–004XL | COJINETE | 1 | 1 | 1 | 1 | 1 | |
| 13 | 5VK–E7402–00 | EJE DE TRACCION COMPLETO | 1 | 1 | 1 | 1 | 1 | |
| 14 | 5VK–E7221–00 | ENGRANAJE RUEDA DE 2DA | 1 | 1 | 1 | 1 | 1 | |
| 15 | 90209–26348 | ARANDELA DE SEPARACION | 1 | 1 | 1 | 1 | 1 | |
| 16 | 93440–28062 | SEGURO | 1 | 1 | 1 | 1 | 1 | |
| 17 | 5VK–E7251–00 | ENGRANAJE RUEDA DE 5TA | 1 | 1 | 1 | 1 | 1 | |
| 18 | 5VK–E7231–00 | ENGRANAJE RUEDA DE 3RA | 1 | 1 | 1 | 1 | 1 | |
| 19 | 90209–21X00 | ARANDELA DE SEPARACION | 1 | 1 | 1 | 1 | 1 | |
| 20 | 93440–25084 | SEGURO | 1 | 1 | 1 | 1 | 1 | |
| 21 | 5VK–E7241–00 | ENGRANAJE DE RUEDA 4TA | 1 | 1 | 1 | 1 | 1 | |
| 22 | 5VK–E7211–00 | ENGRANAJE RUEDA DE 1 RA | 1 | 1 | 1 | 1 | 1 | AP |
| | 5VK–E7211–10 | ENGRANAJE RUEDA DE 1 RA | 1 | 1 | 1 | 1 | 1 | AP |
| 23 | 90201–208G4 | ARANDELA PLANA | 1 | 1 | 1 | 1 | 1 | |
| 24 | 99009–20400 | PRESILLA REDONDA | 1 | 1 | 1 | 1 | 1 | |

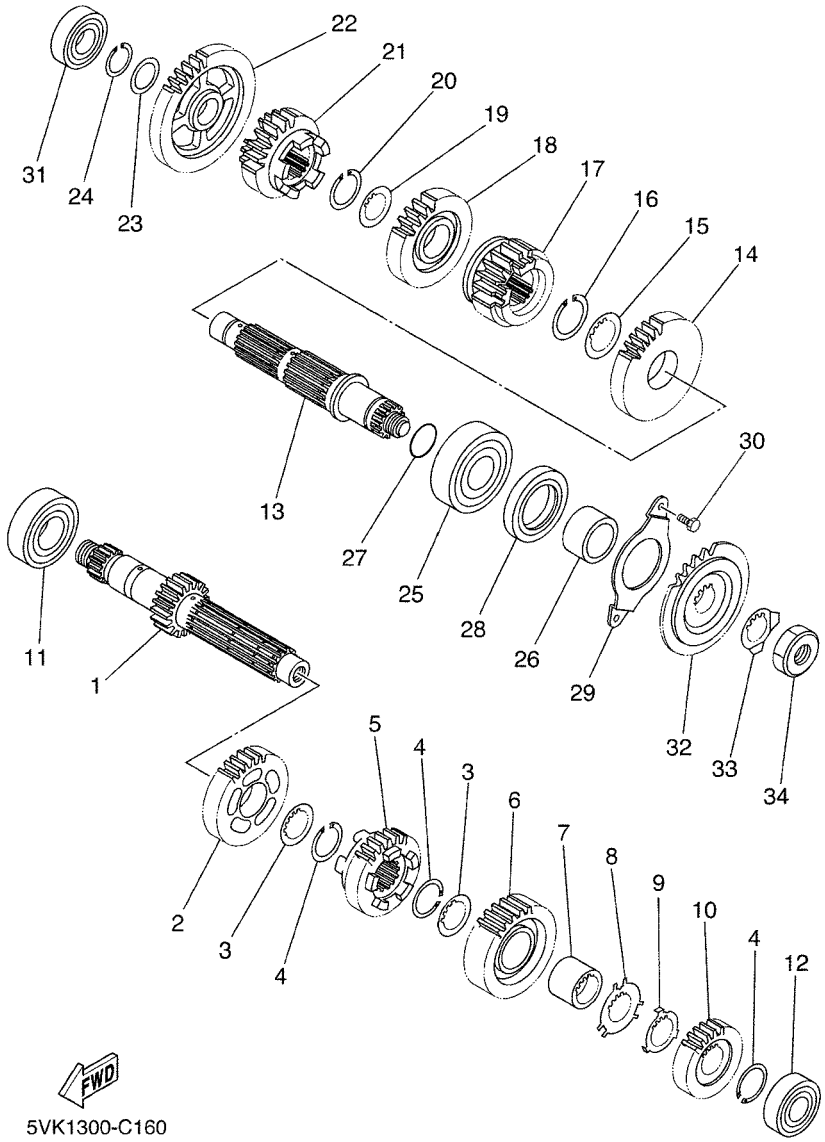


## FIG. 16 TRANSMISION

| REF. Nº | CODIGO Nº | DESCRIPCION | 01 | 02 | 03 | 04 | 05 | OBSERVACIONES |
|---|---|---|---|---|---|---|---|---|
| 25 | 93306–305X4 | COJINETE | 1 | 1 | 1 | 1 | 1 | |
| 26 | 90387–25802 | ESPACIADOR | 1 | 1 | 1 | 1 | 1 | |
| 27 | 93210–22164 | ANILLO O | 1 | 1 | 1 | 1 | 1 | |
| 28 | 93102–35368 | SELLO ACEITE | 1 | 1 | 1 | 1 | 1 | |
| 29 | 5VK–E7471–00 | PLACA, DE CUBIERTA | 1 | 1 | 1 | 1 | 1 | |
| 30 | 90101–06X26 | TORNILLO | 2 | 2 | 2 | 2 | 2 | |
| 31 | 93306–004XM | COJINETE | 1 | 1 | 1 | 1 | 1 | |
| 32 | 5VK–E7460–00 | CORONA | 1 | 1 | 1 | 1 | 1 | |
| 33 | 90215–21X00 | ARANDELA DE CIERRE | 1 | 1 | 1 | 1 | 1 | |
| 34 | 90179–18003 | TUERCA | 1 | 1 | 1 | 1 | 1 | |

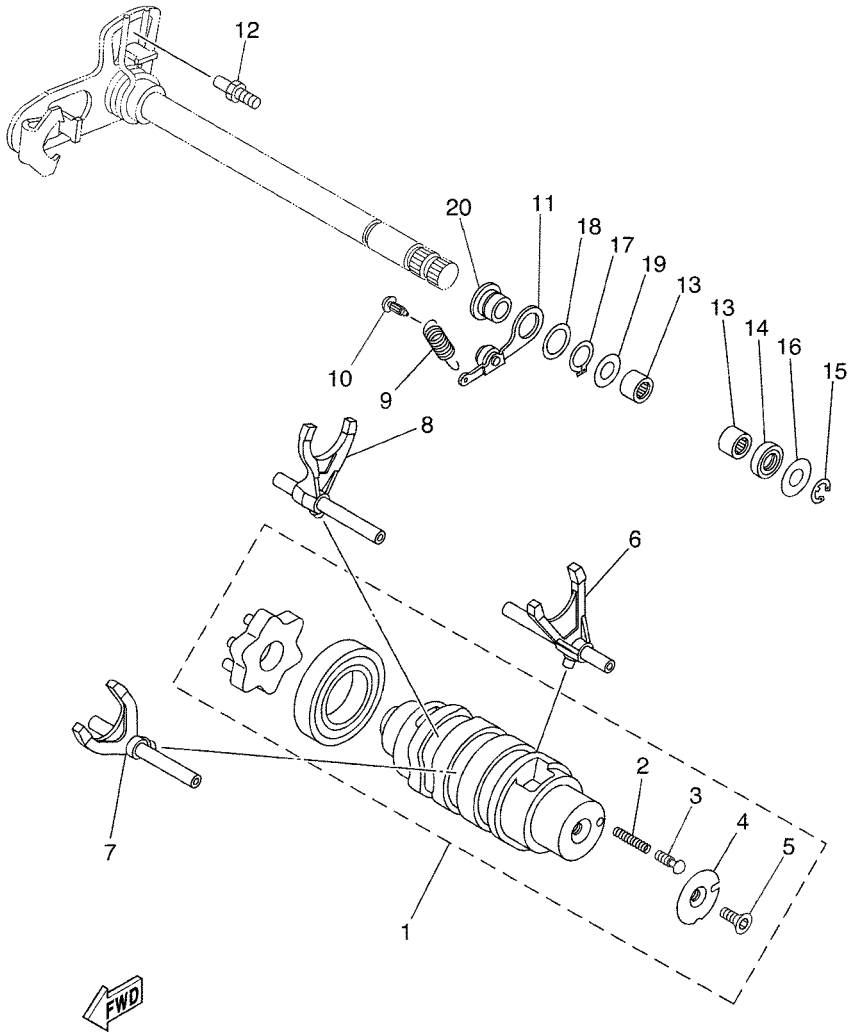


5VK1300-C170

## FIG. 17 LEVA DE CAMBIO & HORQUILLA

| REF. Nº | CODIGO Nº | DESCRIPCION | 01 | 02 | 03 | 04 | 05 | OBSERVACIONES |
|---|---|---|---|---|---|---|---|---|
| 1 | 5VK–18540–00 | LEVA DEL CAMBIO COMPLETA | 1 | 1 | 1 | 1 | 1 | |
| 2 | 90501–06022 | .RESORTE DE COMPRESION | 1 | 1 | 1 | 1 | 1 | |
| 3 | 4UN–18542–00 | .PUNTO MUERTO | 1 | 1 | 1 | 1 | 1 | |
| 4 | 4UN–18566–00 | .PLACA LATERAL 2 | 1 | 1 | 1 | 1 | 1 | |
| 5 | 90149–05321 | .TORNILLO DE REGLAJE | 1 | 1 | 1 | 1 | 1 | |
| 6 | 5VK–E8501–00 | HORQUILLA DEL CAMBIO 1 | 1 | 1 | 1 | 1 | 1 | |
| 7 | 5VK–E8502–00 | HORQUILLA DEL CAMBIO 2 | 1 | 1 | 1 | 1 | 1 | |
| 8 | 5VK–E8503–00 | HORQUILLA DE CAMBIO 3 | 1 | 1 | 1 | 1 | 1 | |
| 9 | 5VK–E8144–00 | GANCHO DE RESORTE | 1 | 1 | 1 | 1 | 1 | |
| 10 | 132–16346–00 | GANCHO DE RESORTE | 1 | 1 | 1 | 1 | 1 | |
| 11 | 5JW–18140–00 | PALANCA DE TOPE COMPLETA | 1 | 1 | 1 | 1 | 1 | |
| 12 | 5VK–18127–00 | PASADOR DE PALANCA | 1 | 1 | 1 | 1 | 1 | |
| 13 | 93315–11206 | COJINETE DE RODILLOS | 2 | 2 | 2 | 2 | 2 | |
| 14 | 93102–12106 | SELLO ACEITE (SD 12-22-5 HS) | 1 | 1 | 1 | 1 | 1 | |
| 15 | 99001–10600 | PRESILLA REDONDA | 1 | 1 | 1 | 1 | 1 | |
| 16 | 90201–12575 | ARANDELA PLANA | 1 | 1 | 1 | 1 | 1 | |
| 17 | 93410–17X00 | SEGURO | 1 | 1 | 1 | 1 | 1 | |
| 18 | 90201–177G4 | ARANDELA PLANA | 1 | 1 | 1 | 1 | 1 | |
| 19 | 90201–120K4 | ARANDELA PLANA | 1 | 1 | 1 | 1 | 1 | |
| 20 | 5VK–18699–00 | COPA 1 | 1 | 1 | 1 | 1 | 1 | |

## FIG. 18 EJE DE CAMBIO & PEDAL

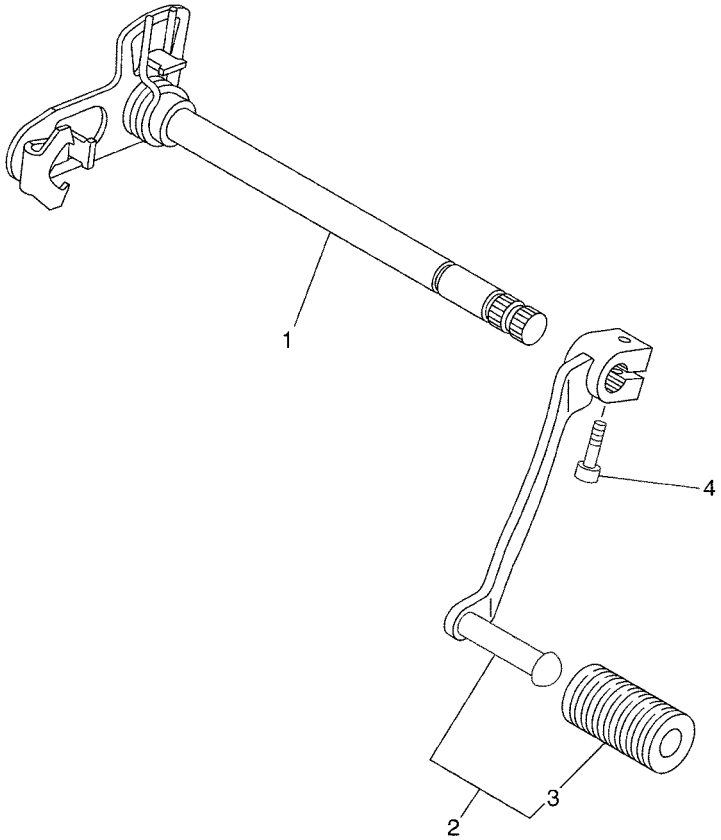


5VK1300-C180

| REF. Nº | CODIGO Nº | DESCRIPCION | 01 | 02 | 03 | 04 | 05 | OBSERVACIONES |
|---|---|---|---|---|---|---|---|---|
| 1 | 5VK–18101–00 | EJE SELECTOR COMPLETO | 1 | 1 | 1 | 1 | 1 | |
| 2 | 5VK–E8110–00 | PEDAL DE CAMBIO COMPLETO | 1 | 1 | 1 | 1 | 1 | |
| 3 | 5VK–E8113–00 | .FUNDA DEL PEDAL DEL CAMBIO | 1 | 1 | 1 | 1 | 1 | |
| 4 | 91317–06020 | PERNO | 1 | 1 | 1 | 1 | 1 | |

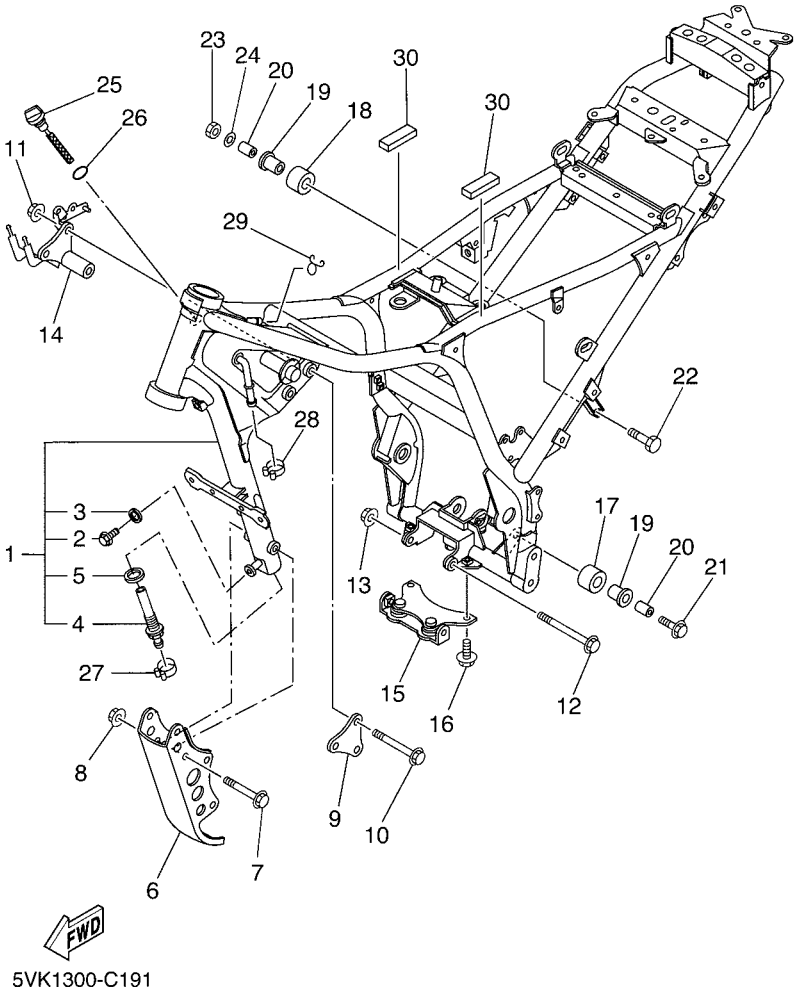


## FIG. 19 CUADRO

| REF. Nº | CODIGO Nº | DESCRIPCION | 01 | 02 | 03 | 04 | 05 | OBSERVACIONES |
|---|---|---|---|---|---|---|---|---|
| 1 | 5VK–F1110–10 | ARMAZON COMPLETO | 1 | 1 | 1 | 1 | 1 | |
| 2 | 95807–08012 | .TORNILLO | 1 | 1 | 1 | 1 | 1 | |
| 3 | 90430–08119 | .JUNTA | 1 | 1 | 1 | 1 | 1 | |
| 4 | 5VK–F1756–00 | .RED DE FILTRO | 1 | 1 | 1 | 1 | 1 | |
| 5 | 90430–22123 | .JUNTA | 1 | 1 | 1 | 1 | 1 | |
| 6 | 5VK–F1316–00 | SOPORTE DE MOTOR 3 | 1 | 1 | 1 | 1 | 1 | |
| 7 | 95814–10070 | TORNILLO | 4 | 4 | 4 | 4 | 4 | |
| 8 | 90179–10658 | TUERCA | 4 | 4 | 4 | 4 | 4 | |
| 9 | 5VK–F1315–00 | SOPORTE DE MOTOR 2 | 1 | 1 | 1 | 1 | 1 | |
| 10 | 95814–10100 | TORNILLO | 3 | 3 | 3 | 3 | 3 | |
| 11 | 90179–10658 | TUERCA | 3 | 3 | 3 | 3 | 3 | |
| 12 | 90105–10040 | TORNILLO CON ARANDELA | 1 | 1 | 1 | 1 | 1 | |
| 13 | 90179–10658 | TUERCA | 1 | 1 | 1 | 1 | 1 | |
| 14 | 5VK–F1410–00 | SOPORTE DE MOTOR COMPLETO | 1 | 1 | 1 | 1 | 1 | |
| 15 | 5VK–21445–00 | SOPORTE DE SILENCIADOR 1 | 1 | 1 | 1 | 1 | 1 | |
| 16 | 95024–08016 | PERNO, DE BRIDA | 2 | 2 | 2 | 2 | 2 | |
| 17 | 30X–22178–00 | TENSOR | 1 | 1 | 1 | 1 | 1 | |
| 18 | 10V–22178–00 | TENSOR | 1 | 1 | 1 | 1 | 1 | |
| 19 | 10V–22184–00 | BUJE | 2 | 2 | 2 | 2 | 2 | |
| 20 | 90387–08024 | ESPACIADOR | 2 | 2 | 2 | 2 | 2 | |
| 21 | 95827–08040 | TORNILLO | 1 | 1 | 1 | 1 | 1 | |
| 22 | 90101–08428 | TORNILLO | 1 | 1 | 1 | 1 | 1 | |
| 23 | 95607–08100 | TUERCA U | 1 | 1 | 1 | 1 | 1 | |
| 24 | 92907–08200 | ARANDELA | 1 | 1 | 1 | 1 | 1 | |
| 25 | 5VK–15362–00 | TAPON DEL NIVEL DE ACEITE | 1 | 1 | 1 | 1 | 1 | |
| 26 | 93210–19123 | ANILLO O | 1 | 1 | 1 | 1 | 1 | |
| 27 | 90467–19800 | PRESILLA | 1 | 1 | 1 | 1 | 1 | |

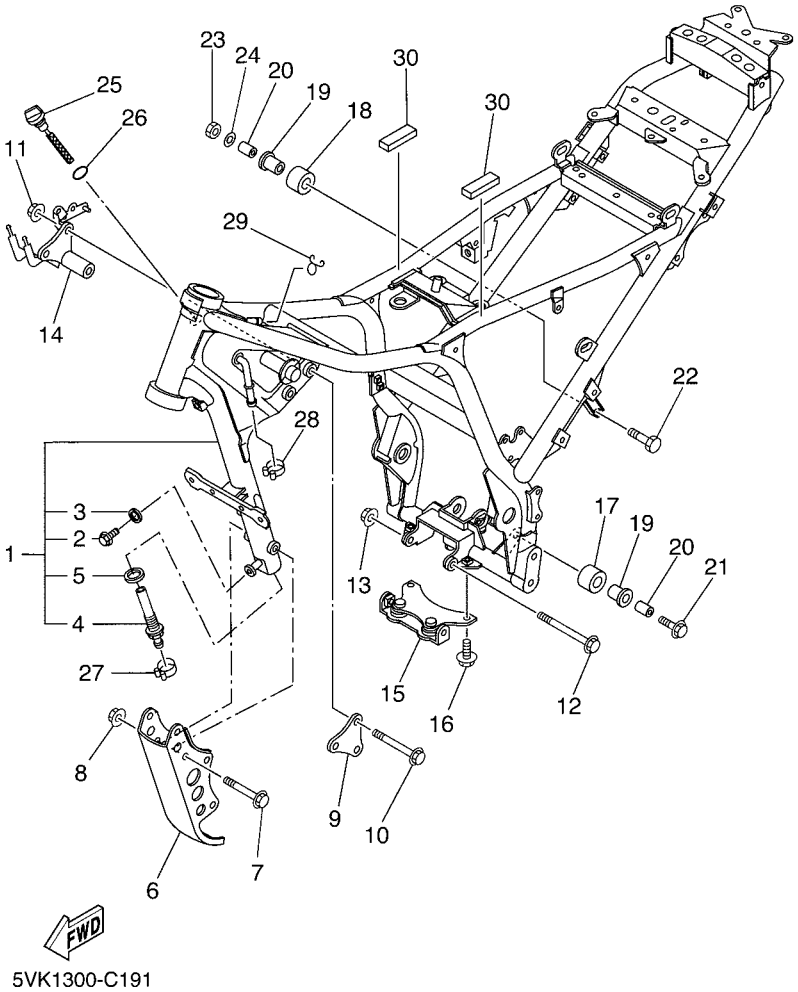


## FIG. 19 CUADRO

| REF. Nº | CODIGO Nº | DESCRIPCION | 01 | 02 | 03 | 04 | 05 | OBSERVACIONES |
|---|---|---|---|---|---|---|---|---|
| 28 | 90467–17800 | PRESILLA | 1 | 1 | 1 | 1 | 1 | |
| 29 | 90467–10008 | PRESILLA | 1 | 1 | 1 | 1 | 1 | |
| 30 | 5VK–21746–00 | AMORTIGUADOR | 2 | 2 | 2 | 2 | 2 | |

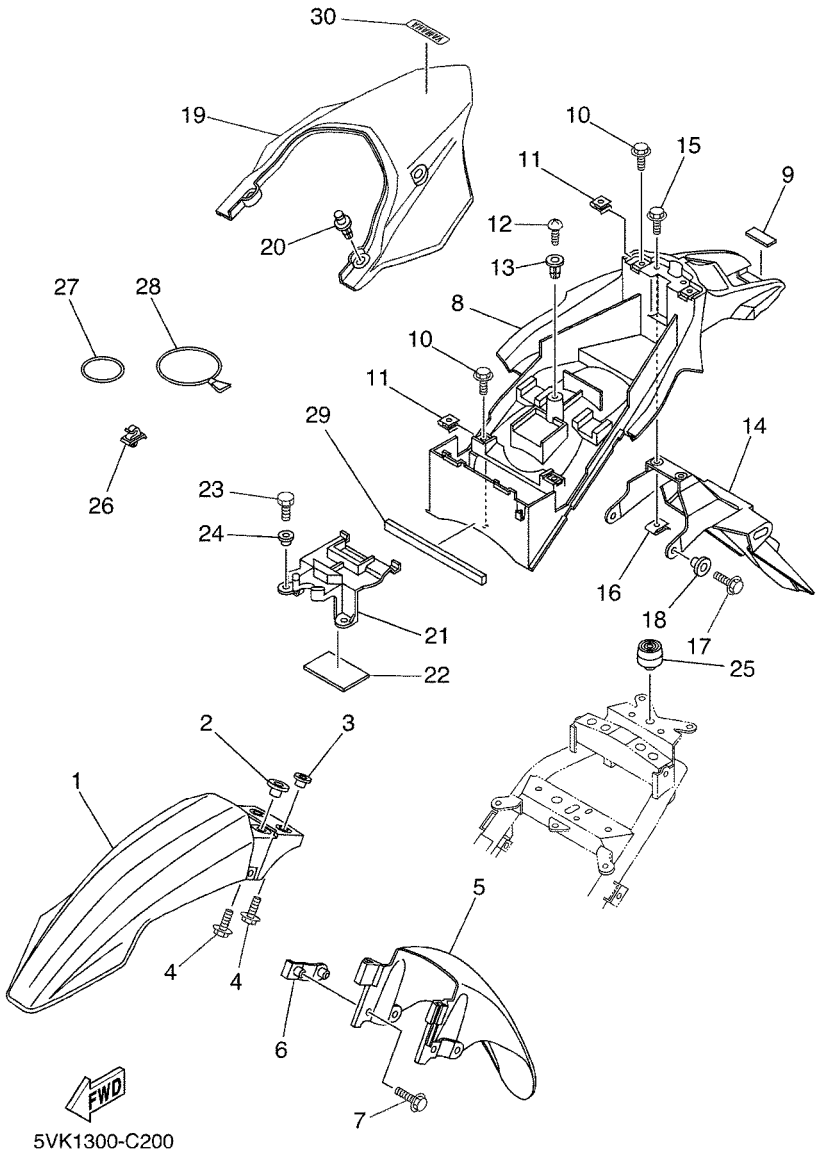


## FIG. 20 GUARDABARRO

| REF. Nº | CODIGO Nº | DESCRIPCION | 01 | 02 | 03 | 04 | 05 | OBSERVACIONES |
|---|---|---|---|---|---|---|---|---|
| 1 | 5VK–F1511–00 | GUARDABARRO DELANTERO | 1 | 1 | 1 | 1 | 1 | UR FOR DPBSE |
| | 5VK–F1511–10 | GUARDABARRO DELANTERO | 1 | 1 | 1 | 1 | 1 | UR FOR DNMD |
| 2 | 90387–065X7 | ESPACIADOR | 2 | 2 | 2 | 2 | 2 | |
| 3 | 90387–087L0 | ESPACIADOR | 2 | 2 | 2 | 2 | 2 | |
| 4 | 90119–06096 | TORNILLO CON ARANDELA | 4 | 4 | 4 | 4 | 4 | |
| 5 | 5VK–F1556–00 | GUARDABARRO, DELANTERO 2 | 1 | 1 | 1 | 1 | 1 | |
| 6 | 5VK–F1587–00 | APOYO 1 | 2 | 2 | 2 | 2 | 2 | |
| 7 | 90119–06051 | TORNILLO CON ARANDELA | 4 | 4 | 4 | 4 | 4 | |
| 8 | 5VK–F1611–00 | GUARDABARRO TRASERO | 1 | 1 | 1 | 1 | 1 | |
| 9 | 5DM–28371–00 | AMORTIGUADOR | 1 | 1 | 1 | 1 | 1 | |
| 10 | 95807–06012 | TORNILLO | 4 | 4 | 4 | 4 | 4 | |
| 11 | 90183–06023 | TUERCA DE RESORTE | 4 | 4 | 4 | 4 | 4 | |
| 12 | 97707–60020 | TORNILLO ROSCA HEMBRA | 1 | 1 | 1 | 1 | 1 | |
| 13 | 90338–08226 | TAPON | 1 | 1 | 1 | 1 | 1 | |
| 14 | 5VK–F1685–00 | SOPORTE DE LICENCIA | 1 | 1 | 1 | 1 | 1 | |
| 15 | 90119–06118 | TORNILLO CON ARANDELA | 2 | 2 | 2 | 2 | 2 | |
| 16 | 90183–06023 | TUERCA DE RESORTE | 2 | 2 | 2 | 2 | 2 | |
| 17 | 95807–06014 | TORNILLO | 2 | 2 | 2 | 2 | 2 | |
| 18 | 90387–06648 | ESPACIADOR | 2 | 2 | 2 | 2 | 2 | |
| 19 | 5VK–F1651–00 | TAPA DE GUARDABARRO TRAS. | 1 | 1 | 1 | 1 | 1 | UR FOR DPBSE |
| | 5VK–F1651–20 | TAPA DE GUARDABARRO TRAS. | 1 | 1 | 1 | 1 | 1 | UR FOR DNMD |
| 20 | 90269–08066 | REMACHE | 2 | 2 | 2 | 2 | 2 | |
| 21 | 5VK–F160E–00 | CAJA | 1 | 1 | 1 | 1 | 1 | |
| 22 | 5VK–21639–00 | AMORTIGUADOR 2 | 1 | 1 | 1 | 1 | 1 | |
| 23 | 97007–05012 | PERNO | 2 | 2 | 2 | 2 | 2 | |
| 24 | 90387–05803 | ESPACIADOR | 2 | 2 | 2 | 2 | 2 | |
| 25 | 1T4–24741–00 | COJIN DE ASIENTO | 1 | 1 | 1 | 1 | 1 | |

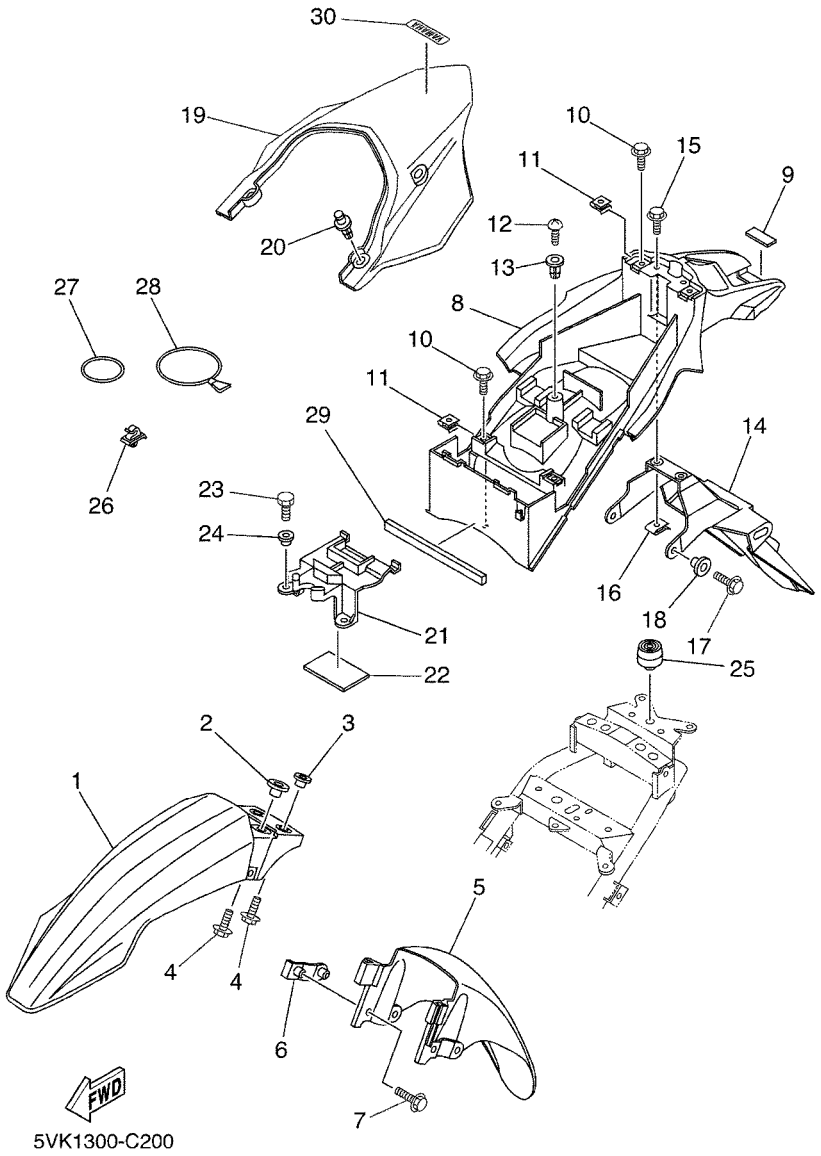


## FIG. 20 GUARDABARRO

| REF. Nº | CODIGO Nº | DESCRIPCION | 01 | 02 | 03 | 04 | 05 | OBSERVACIONES |
|---|---|---|---|---|---|---|---|---|
| 26 | 90464–07259 | BRIDA | 4 | 4 | 4 | 4 | 4 | |
| 27 | 4XV–21376–00 | BANDA DE HERRAMIENTA | 1 | 1 | 1 | 1 | 1 | |
| 28 | 3YX–21376–00 | BANDA DE HERRAMIENTA | 1 | 1 | 1 | 1 | 1 | |
| 29 | 5VK–21649–00 | AMORTIGUADOR | 1 | 1 | 1 | 1 | 1 | |
| 30 | 5VK–2153A–00 | EMBLEMA, YAMAHA | 1 | 1 | 1 | 1 | 1 | UR |
| | 5VK–2153A–10 | EMBLEMA, YAMAHA | 1 | 1 | 1 | 1 | 1 | UR |

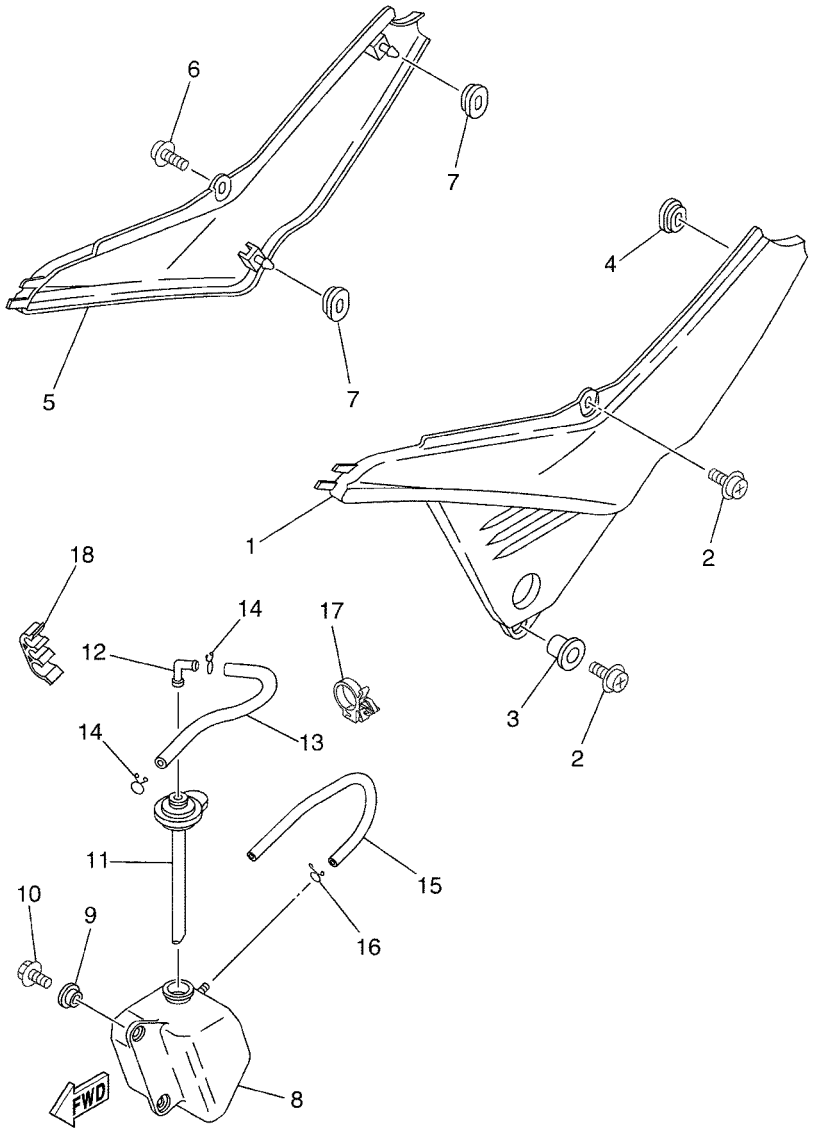

5VK1300-C210

## FIG. 21 CUBIERTA LATERAL

| REF. Nº | CODIGO Nº | DESCRIPCION | 01 | 02 | 03 | 04 | 05 | OBSERVACIONES |
|---|---|---|---|---|---|---|---|---|
| 1 | 5VK–F1711–00 | CUBIERTA LATERAL 1 | 1 | 1 | 1 | 1 | 1 | |
| 2 | 90159–06078 | TORNILLO CON VALONA | 2 | 2 | 2 | 2 | 2 | |
| 3 | 90387–07717 | ESPACIADOR | 1 | 1 | 1 | 1 | 1 | |
| 4 | 90480–01558 | TAPON | 1 | 1 | 1 | 1 | 1 | |
| 5 | 5VK–F1721–00 | CUBIERTA LATERAL 2 | 1 | 1 | 1 | 1 | 1 | |
| 6 | 90159–06078 | TORNILLO CON VALONA | 1 | 1 | 1 | 1 | 1 | |
| 7 | 90480–01558 | TAPON | 2 | 2 | 2 | 2 | 2 | |
| 8 | 5VK–F1871–00 | TANQUE DE RECUPERACION | 1 | 1 | 1 | 1 | 1 | |
| 9 | 90387–062M9 | ESPACIADOR | 2 | 2 | 2 | 2 | 2 | |
| 10 | 95807–06012 | TORNILLO | 2 | 2 | 2 | 2 | 2 | |
| 11 | 5VK–21875–00 | TAPA | 1 | 1 | 1 | 1 | 1 | |
| 12 | 26H–21828–00 | CODO | 1 | 1 | 1 | 1 | 1 | |
| 13 | 90445–08020 | TUBO | 1 | 1 | 1 | 1 | 1 | |
| 14 | 90467–08003 | PRESILLA | 2 | 2 | 2 | 2 | 2 | |
| 15 | 90445–08008 | TUBO | 1 | 1 | 1 | 1 | 1 | |
| 16 | 90467–08003 | PRESILLA | 1 | 1 | 1 | 1 | 1 | |
| 17 | 90464–16006 | BRIDA | 1 | 1 | 1 | 1 | 1 | |
| 18 | 90464–11008 | BRIDA | 1 | 1 | 1 | 1 | 1 | |

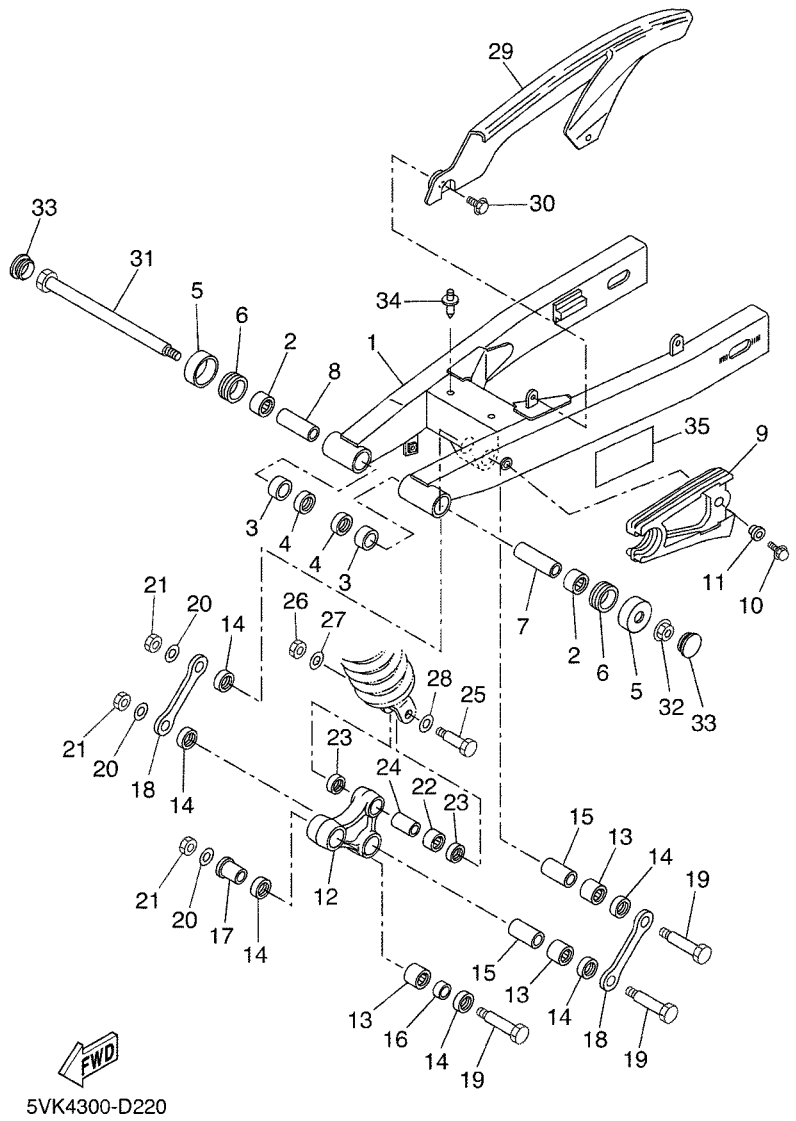


## FIG. 22 BRAZO TRASERO

| REF. Nº | CODIGO Nº | DESCRIPCION | 01 | 02 | 03 | 04 | 05 | OBSERVACIONES |
|---|---|---|---|---|---|---|---|---|
| 1 | 5VK–F2110–00 | BRAZO TRASERO COMPLETO | 1 | 1 | 1 | 1 | 1 | |
| 2 | 93315–22251 | COJINETE DE RODILLOS | 2 | 2 | 2 | 2 | 2 | |
| 3 | 90380–22111 | CASQUILLO SOLIDO | 2 | 2 | 2 | 2 | 2 | |
| 4 | 93106–22019 | SELLO ACEITE (DC 22-28-8) | 2 | 2 | 2 | 2 | 2 | |
| 5 | 30X–2219X–00 | CUBIERTA | 2 | 2 | 2 | 2 | 2 | |
| 6 | 93108–35004 | SELLO ACEITE (35-41-8) | 2 | 2 | 2 | 2 | 2 | |
| 7 | 5VK–22124–00 | BUJE 2 | 1 | 1 | 1 | 1 | 1 | |
| 8 | 5VK–22123–00 | BUJE 1 | 1 | 1 | 1 | 1 | 1 | |
| 9 | 5VK–F2151–00 | SELLO DE GUARDA | 1 | 1 | 1 | 1 | 1 | |
| 10 | 95807–06020 | TORNILLO | 1 | 1 | 1 | 1 | 1 | |
| 11 | 90387–06066 | ESPACIADOR | 1 | 1 | 1 | 1 | 1 | |
| 12 | 5VK–F217A–00 | BRAZO REEURIO | 1 | 1 | 1 | 1 | 1 | |
| 13 | 93315–32053 | COJINETE DE RODILLOS | 3 | 3 | 3 | 3 | 3 | |
| 14 | 93109–20076 | SELLO ACEITE | 6 | 6 | 6 | 6 | 6 | |
| 15 | 90387–167R5 | ESPACIADOR | 2 | 2 | 2 | 2 | 2 | |
| 16 | 90387–16011 | ESPACIADOR | 1 | 1 | 1 | 1 | 1 | |
| 17 | 90387–16012 | ESPACIADOR | 1 | 1 | 1 | 1 | 1 | |
| 18 | 5VK–F217F–00 | BIELA COMPLETA 1 | 2 | 2 | 2 | 2 | 2 | |
| 19 | 5VK–22125–00 | PERNO | 3 | 3 | 3 | 3 | 3 | |
| 20 | 90201–160F6 | ARANDELA PLANA | 3 | 3 | 3 | 3 | 3 | |
| 21 | 90185–14002 | TUERCA AUTOBLOCANTE | 3 | 3 | 3 | 3 | 3 | |
| 22 | 93315–31759 | COJINETE DE RODILLOS | 1 | 1 | 1 | 1 | 1 | |
| 23 | 93109–17071 | SELLO ACEITE | 2 | 2 | 2 | 2 | 2 | |
| 24 | 90387–127W0 | ESPACIADOR | 1 | 1 | 1 | 1 | 1 | |
| 25 | 90101–10659 | TORNILLO | 1 | 1 | 1 | 1 | 1 | |
| 26 | 95614–10100 | TUERCA AUTOBLOCANTE | 1 | 1 | 1 | 1 | 1 | |
| 27 | 90201–101J1 | ARANDELA PLANA | 1 | 1 | 1 | 1 | 1 | |

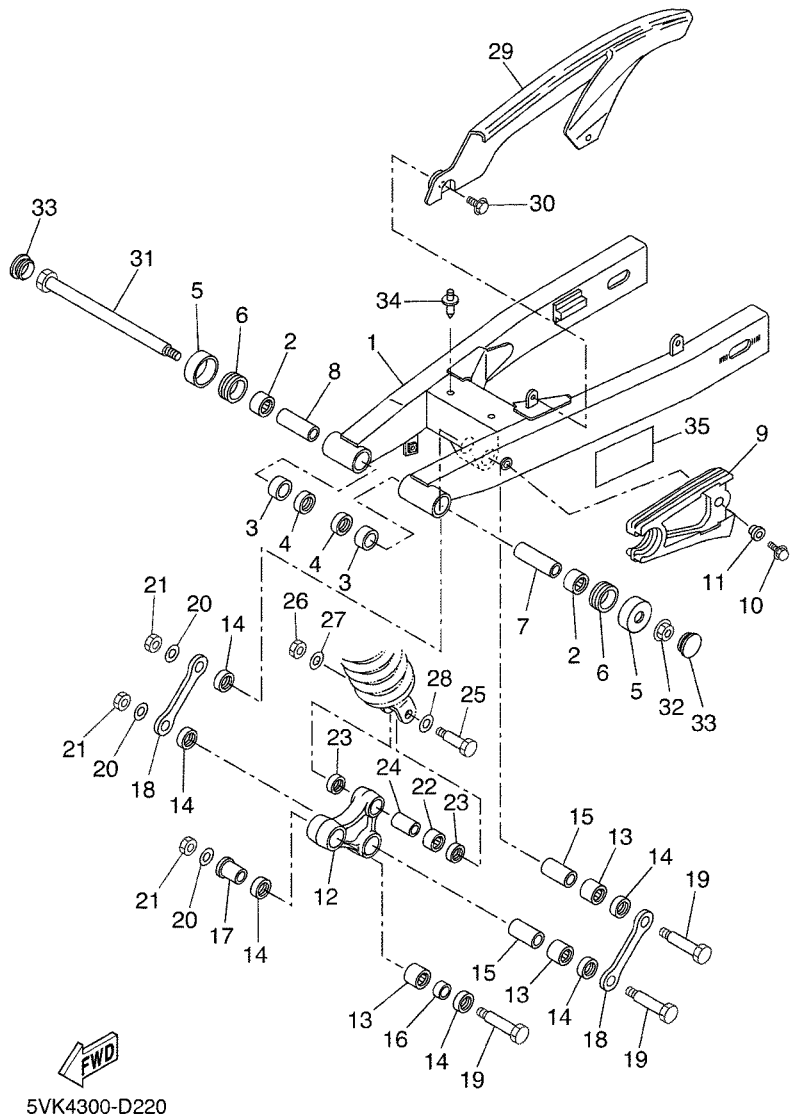


5VK4300-D220

## FIG. 22 BRAZO TRASERO

| REF. Nº | CODIGO Nº | DESCRIPCION | 01 | 02 | 03 | 04 | 05 | OBSERVACIONES |
|---|---|---|---|---|---|---|---|---|
| 28 | 90201–13013 | ARANDELA PLANA | 1 | 1 | 1 | 1 | 1 | |
| 29 | 5VK–F2311–00 | CABRECADENA | 1 | 1 | 1 | 1 | 1 | |
| 30 | 90119–06861 | TORNILLO CON ARANDELA | 2 | 2 | 2 | 2 | 2 | |
| 31 | 1VJ–22141–00 | EJE DEL BARCULANTE | 1 | 1 | 1 | 1 | 1 | |
| 32 | 95607–14200 | TUERCA DE AUTO-CIERRE | 1 | 1 | 1 | 1 | 1 | |
| 33 | 90338–28242 | TAPON | 2 | 2 | 2 | 2 | 2 | |
| 34 | 90269–08066 | REMACHE | 2 | 2 | 2 | 2 | 2 | |
| 35 | 5VK–F1668–00 | ETIQUETA DE FRANJA | 1 | 1 | 1 | 1 | 1 | |

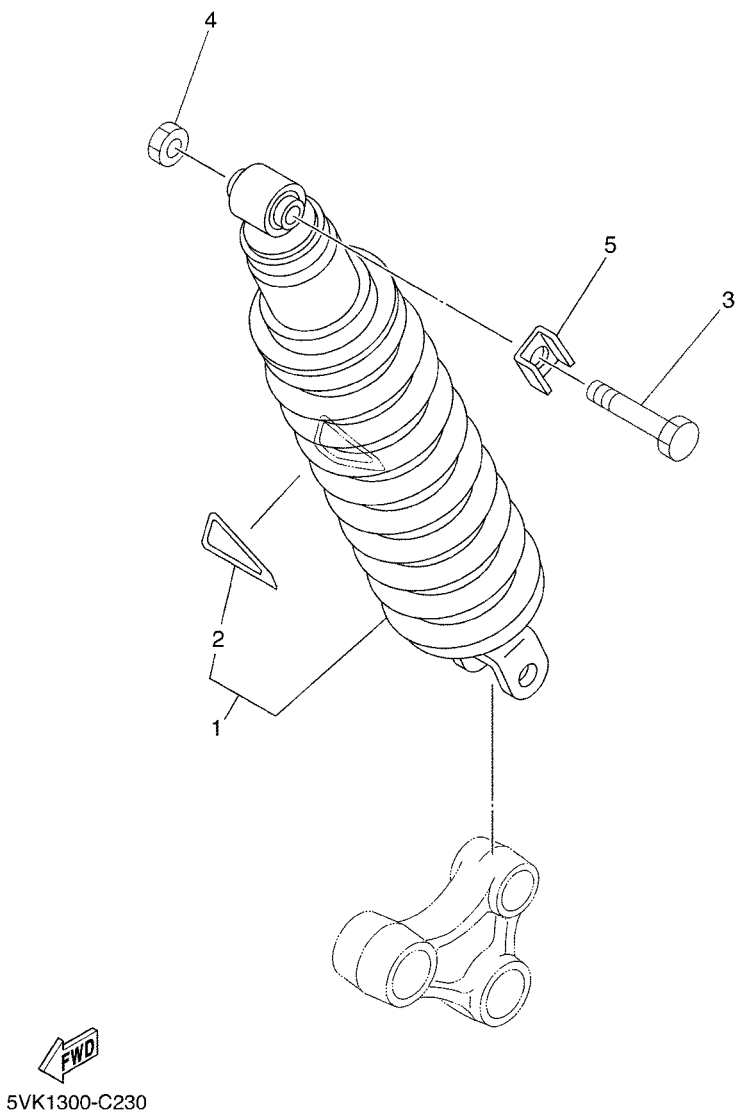


## FIG. 23 SUSPENSION TRASERO

| REF. Nº | CODIGO Nº | DESCRIPCION | 01 | 02 | 03 | 04 | 05 | OBSERVACIONES |
|---|---|---|---|---|---|---|---|---|
| 1 | 5VK–22210–01 | AMORTIGUADOR TRASERO COMPLETO | 1 | 1 | 1 | 1 | 1 | |
| 2 | 4AA–22259–40 | .ETIQUETA DE ADVERTENCIA | 1 | 1 | 1 | 1 | 1 | |
| 3 | 90101–12742 | TORNILLO | 1 | 1 | 1 | 1 | 1 | |
| 4 | 95617–12100 | TUERCA | 1 | 1 | 1 | 1 | 1 | |
| 5 | 5VK–F2243–00 | ARANDELA 1 | 1 | 1 | 1 | 1 | 1 | |

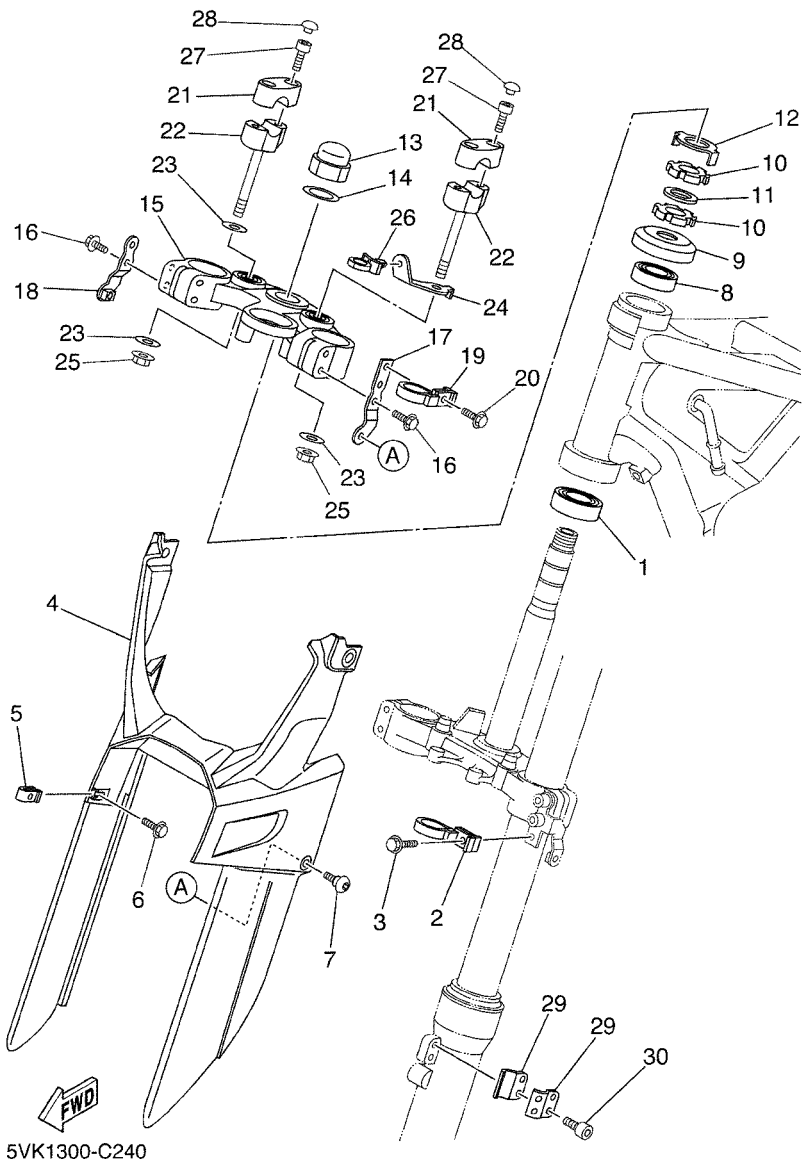


## FIG. 24 DIRECCION

| REF. Nº | CODIGO Nº | DESCRIPCION | 01 | 02 | 03 | 04 | 05 | OBSERVACIONES |
|---|---|---|---|---|---|---|---|---|
| 1 | 93332–00008 | COJINETE | 1 | 1 | 1 | 1 | 1 | |
| 2 | 5VK–23389–00 | GUIA DE CABLE | 1 | 1 | 1 | 1 | 1 | |
| 3 | 90105–05361 | TORNILLO | 1 | 1 | 1 | 1 | 1 | |
| 4 | 5VK–F3472–00 | PROTECTOR | 1 | 1 | 1 | 1 | 1 | |
| 5 | 90183–05061 | TUERCA DE RESORTE | 2 | 2 | 2 | 2 | 2 | |
| 6 | 90119–05193 | TORNILLO CON ARANDELA | 2 | 2 | 2 | 2 | 2 | |
| 7 | 90111–05011 | TORNILLO | 2 | 2 | 2 | 2 | 2 | |
| 8 | 93332–000Y6 | COJINETE | 1 | 1 | 1 | 1 | 1 | |
| 9 | 1W1–23416–00 | CUBIERTA DE BASE DE BOLA 2 | 1 | 1 | 1 | 1 | 1 | |
| 10 | 90179–25615 | TUERCA | 2 | 2 | 2 | 2 | 2 | |
| 11 | 90202–26142 | ARANDELA DE PLANA | 1 | 1 | 1 | 1 | 1 | |
| 12 | 3YF–23418–00 | ARANDELA ESPECIAL | 1 | 1 | 1 | 1 | 1 | |
| 13 | 90176–22081 | TUERCA CORONA | 1 | 1 | 1 | 1 | 1 | |
| 14 | 90201–220T0 | ARANDELA PLANA | 1 | 1 | 1 | 1 | 1 | |
| 15 | 5VK–23430–00 | PLATINA SUPERIOR | 1 | 1 | 1 | 1 | 1 | |
| 16 | 95027–08040 | PERNO, DE BRIDA | 4 | 4 | 4 | 4 | 4 | |
| 17 | 5VK–F317E–00 | SOPORTE | 1 | 1 | 1 | 1 | 1 | |
| 18 | 5VK–F317F–00 | FUCO SOPORTE COMPL | 1 | 1 | 1 | 1 | 1 | |
| 19 | 5VK–23389–00 | GUIA DE CABLE | 1 | 1 | 1 | 1 | 1 | |
| 20 | 90105–05361 | TORNILLO | 1 | 1 | 1 | 1 | 1 | |
| 21 | 4H7–23441–01–P5 | SOPORTE DE MANUBRIO | 2 | 2 | 2 | 2 | 2 | S8 |
| 22 | 3Y6–23442–00–P1 | SOPORTE DE MANUBRIO INFERIOR | 2 | 2 | 2 | 2 | 2 | S8 |
| 23 | 90201–10141 | ARANDELA PLANA | 3 | 3 | 3 | 3 | 3 | |
| 24 | 5VK–F317M–00 | APOYO 3 | 1 | 1 | 1 | 1 | 1 | |
| 25 | 95607–10200 | TUERCA DE AUTO-CIERRE | 2 | 2 | 2 | 2 | 2 | |
| 26 | 90464–12001 | BRIDA | 1 | 1 | 1 | 1 | 1 | |
| 27 | 91317–08030 | PERNO | 4 | 4 | 4 | 4 | 4 | |

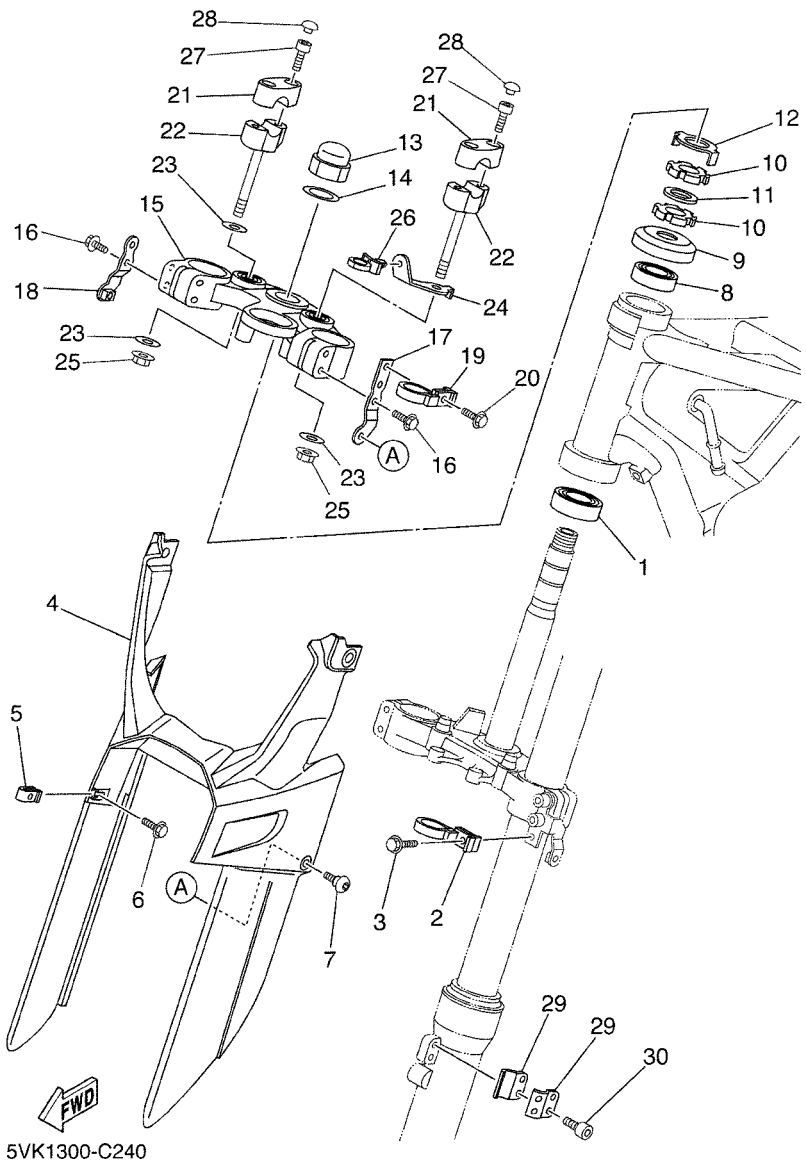


## FIG. 24 DIRECCION

| REF. Nº | CODIGO Nº | DESCRIPCION | 01 | 02 | 03 | 04 | 05 | OBSERVACIONES |
|---|---|---|---|---|---|---|---|---|
| 28 | 90338–06004 | TAPON | 4 | 4 | 4 | 4 | 4 | |
| 29 | 5VK–F3466–00 | GRAMPA | 2 | 2 | 2 | 2 | 2 | |
| 30 | 91317–06016 | PERNO | 2 | 2 | 2 | 2 | 2 | |

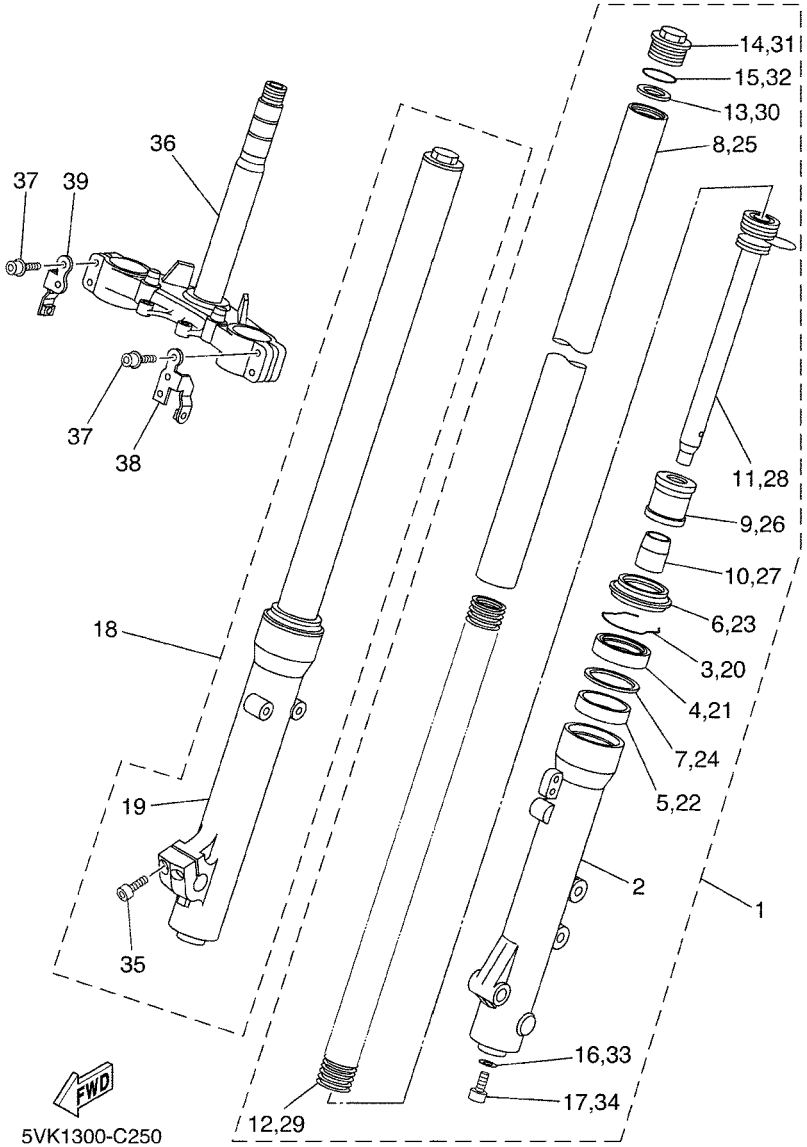


## FIG. 25 HORQUILLA DELANTERA

| REF. Nº | CODIGO Nº | DESCRIPCION | 01 | 02 | 03 | 04 | 05 | OBSERVACIONES |
|---|---|---|---|---|---|---|---|---|
| 1 | 5VK–F3102–00 | HORQUILLA DELANTERA COMPL.(MI) | 1 | 1 | 1 | 1 | 1 | (PAIOLI) |
| 2 | 5VK–F3126–00 | .TUBO EXTERIOR (IZQUIERDO) | 1 | 1 | 1 | 1 | 1 | (PAIOLI) |
| 3 | 5VK–F3153–00 | .ANILLO DE ENGANCHE | 1 | 1 | 1 | 1 | 1 | (PAIOLI) |
| 4 | 4DA–23145–L0 | .RETEN DE ACEITE | 1 | 1 | 1 | 1 | 1 | |
| 5 | 5VK–F3125–00 | .METAL CORREDIZO 1 | 1 | 1 | 1 | 1 | 1 | (PAIOLI) |
| 6 | 5VK–F3144–00 | .GUARDAPOLVO | 1 | 1 | 1 | 1 | 1 | (PAIOLI) |
| 7 | 5VK–F3146–00 | .ARANDELA DE SELLO DE ACEITE | 1 | 1 | 1 | 1 | 1 | (PAIOLI) |
| 8 | 5VK–F3110–00 | .TUBO INTERIOR COMPLETO 1 | 1 | 1 | 1 | 1 | 1 | (PAIOLI) |
| 9 | 3XJ–23171–L0 | .PISTON HORQUILLA DELANT. | 1 | 1 | 1 | 1 | 1 | |
| 10 | 5VK–F3173–00 | .VASTAGO AHUSADO | 1 | 1 | 1 | 1 | 1 | (PAIOLI) |
| 11 | 5VK–F3170–00 | .CILINDRO COMPL DE HORQ DELAN | 1 | 1 | 1 | 1 | 1 | (PAIOLI) |
| 12 | 5VK–F3141–00 | .RESORTE HORQUILLA DELANT. | 1 | 1 | 1 | 1 | 1 | (PAIOLI) |
| 13 | 5VK–F3149–00 | .ARANDELA DE RESORTE SUPERIOR | 1 | 1 | 1 | 1 | 1 | (PAIOLI) |
| 14 | 5VK–F3111–00 | .TAPON | 1 | 1 | 1 | 1 | 1 | (PAIOLI) |
| 15 | 4V4–23188–L0 | .ANILLO O | 1 | 1 | 1 | 1 | 1 | |
| 16 | 5JH–F3158–00 | .EMPAQUE | 1 | 1 | 1 | 1 | 1 | (PAIOLI) |
| 17 | 5VK–F3181–00 | .TORNILLO CABEZAHEXAGONAL | 1 | 1 | 1 | 1 | 1 | (PAIOLI) |
| 18 | 5VK–F3103–00 | HORQUILLA DELANTERA COMPL.(MD) | 1 | 1 | 1 | 1 | 1 | (PAIOLI) |
| 19 | 5VK–F3136–00 | .TUBO EXTERIOR | 1 | 1 | 1 | 1 | 1 | (PAIOLI) |
| 20 | 5VK–F3153–00 | .ANILLO DE ENGANCHE | 1 | 1 | 1 | 1 | 1 | (PAIOLI) |
| 21 | 4DA–23145–L0 | .RETEN DE ACEITE | 1 | 1 | 1 | 1 | 1 | |
| 22 | 5VK–F3125–00 | .METAL CORREDIZO 1 | 1 | 1 | 1 | 1 | 1 | (PAIOLI) |
| 23 | 5VK–F3144–00 | .GUARDAPOLVO | 1 | 1 | 1 | 1 | 1 | (PAIOLI) |
| 24 | 5VK–F3146–00 | .ARANDELA DE SELLO DE ACEITE | 1 | 1 | 1 | 1 | 1 | (PAIOLI) |
| 25 | 5VK–F3110–00 | .TUBO INTERIOR COMPLETO 1 | 1 | 1 | 1 | 1 | 1 | (PAIOLI) |
| 26 | 3XJ–23171–L0 | .PISTON HORQUILLA DELANT. | 1 | 1 | 1 | 1 | 1 | |
| 27 | 5VK–F3173–00 | .VASTAGO AHUSADO | 1 | 1 | 1 | 1 | 1 | (PAIOLI) |

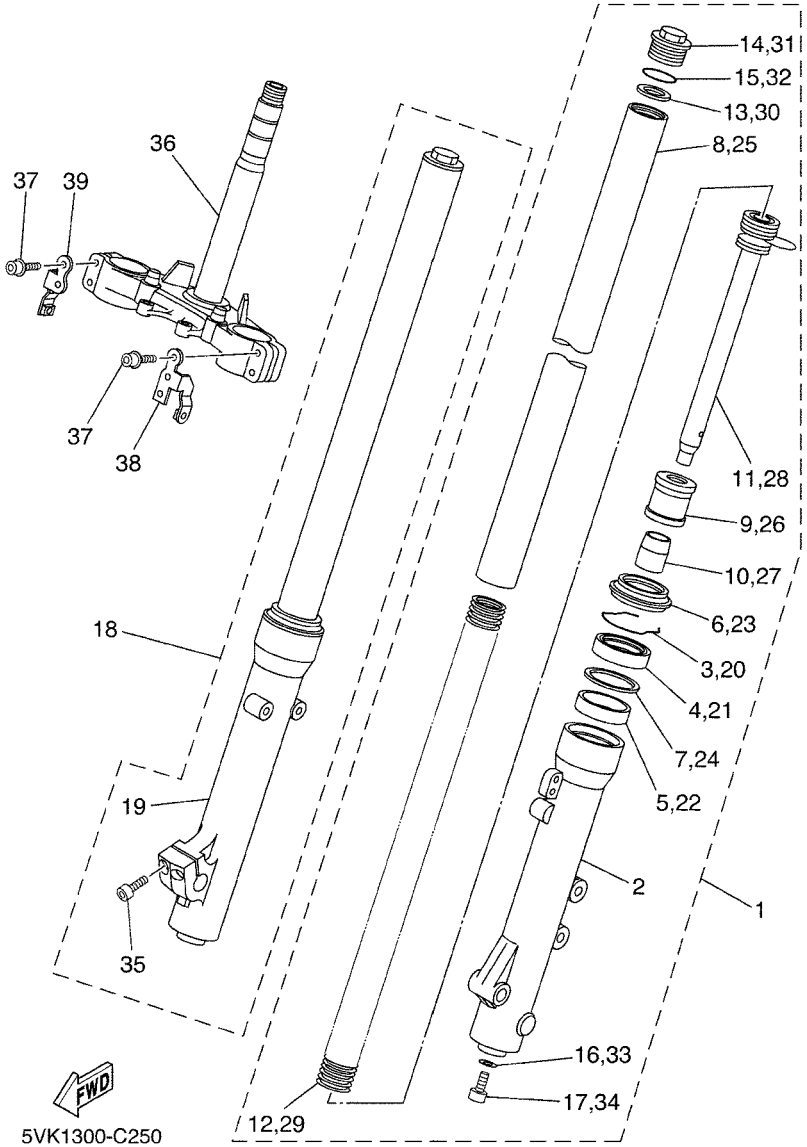


## FIG. 25 HORQUILLA DELANTERA

| REF. Nº | CODIGO Nº | DESCRIPCION | 01 | 02 | 03 | 04 | 05 | OBSERVACIONES |
|---|---|---|---|---|---|---|---|---|
| 28 | 5VK–F3170–00 | .CILINDRO COMPL DE HORQ DELAN | 1 | 1 | 1 | 1 | 1 | (PAIOLI) |
| 29 | 5VK–F3141–00 | .RESORTE HORQUILLA DELANT. | 1 | 1 | 1 | 1 | 1 | (PAIOLI) |
| 30 | 5VK–F3149–00 | .ARANDELA DE RESORTE SUPERIOR | 1 | 1 | 1 | 1 | 1 | (PAIOLI) |
| 31 | 5VK–F3111–00 | .TAPON | 1 | 1 | 1 | 1 | 1 | (PAIOLI) |
| 32 | 4V4–23188–L0 | .ANILLO O | 1 | 1 | 1 | 1 | 1 | |
| 33 | 5JH–F3158–00 | .EMPAQUE | 1 | 1 | 1 | 1 | 1 | (PAIOLI) |
| 34 | 5VK–F3181–00 | .TORNILLO CABEZAHEXAGONAL | 1 | 1 | 1 | 1 | 1 | (PAIOLI) |
| 35 | 4CU–F3181–00 | .PERNO (M8X25) | 2 | 2 | 2 | 2 | 2 | (PAIOLI) |
| 36 | 5VK–F3340–00 | PLATINA INFERIOR COMPLETA | 1 | 1 | 1 | 1 | 1 | |
| 37 | 5SE–F3394–00 | PERNO ESPECIAL | 4 | 4 | 4 | 4 | 4 | |
| 38 | 5VK–F334G–00 | SOPORTE 1 | 1 | 1 | 1 | 1 | 1 | |
| 39 | 5VK–F334H–00 | SOPORTE 2 | 1 | 1 | 1 | 1 | 1 | |

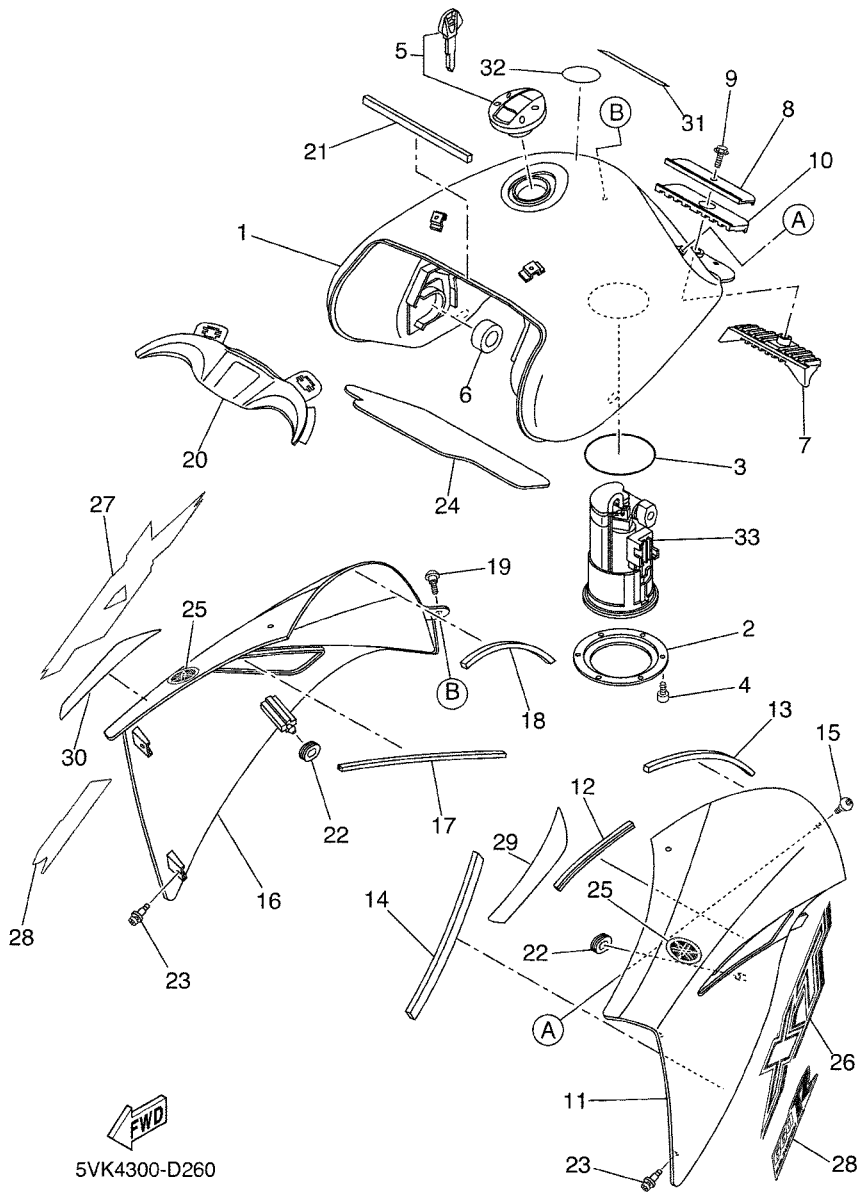


## FIG. 26 DEPOSITO DE COMBUSTIBLE

| REF. Nº | CODIGO Nº | DESCRIPCION | 01 | 02 | 03 | 04 | 05 | OBSERVACIONES |
|---|---|---|---|---|---|---|---|---|
| 1 | 5VK–F4110–10–P0 | DEPOSITO DE COMBUSTIBLE COMP. | 1 | 1 | 1 | 1 | 1 | MBL2 |
| 2 | 5VK–F4491–00 | SOPORTE BOMBA COMBUSTIBLE | 1 | 1 | 1 | 1 | 1 | |
| 3 | 5JW–24486–00 | ANILLO O | 1 | 1 | 1 | 1 | 1 | |
| 4 | 91317–05010 | PERNO | 6 | 6 | 6 | 6 | 6 | |
| 5 | 5VK–24602–00 | TAPON COMPLETO | 1 | 1 | 1 | 1 | 1 | |
| 6 | 3TB–24181–00 | AMORTIGUADOR DE MONTAJE 1 | 2 | 2 | 2 | 2 | 2 | |
| 7 | 5VK–24182–00 | AMORTIGUADOR DE MONTAJE 2 | 1 | 1 | 1 | 1 | 1 | |
| 8 | 5VK–F4186–00 | ARANDELA ESPECIAL | 1 | 1 | 1 | 1 | 1 | |
| 9 | 95827–06012 | TORNILLO | 1 | 1 | 1 | 1 | 1 | |
| 10 | 5VK–24183–00 | AMORTIGUADOR DE MONTAJE 3 | 1 | 1 | 1 | 1 | 1 | |
| 11 | 5VK–F137W–01 | CUBIERTA DE GUIA DE AIRE 1 | 1 | 1 | 1 | 1 | 1 | UR FOR DPBSE |
| | 5VK–F137W–21 | CUBIERTA DE GUIA DE AIRE 1 | 1 | 1 | 1 | 1 | 1 | UR FOR DNMD |
| 12 | 5VK–28345–00 | MOLDURA 1 | 1 | 1 | 1 | 1 | 1 | |
| 13 | 5VK–2414H–00 | EQUILIBRIO, CUBIERTA | 1 | 1 | 1 | 1 | 1 | |
| 14 | 5VK–2414K–00 | EQUILIBRIO, CUBIERTA 3 | 1 | 1 | 1 | 1 | 1 | |
| 15 | 90111–05011 | TORNILLO | 2 | 2 | 2 | 2 | 2 | |
| 16 | 5VK–F137X–01 | CUBIERTA DE GUIA DE AIRE 2 | 1 | 1 | 1 | 1 | 1 | UR FOR DPBSE |
| | 5VK–F137X–21 | CUBIERTA DE GUIA DE AIRE 2 | 1 | 1 | 1 | 1 | 1 | UR FOR DNMD |
| 17 | 5VK–28345–00 | MOLDURA 1 | 1 | 1 | 1 | 1 | 1 | |
| 18 | 5VK–2414H–00 | EQUILIBRIO, CUBIERTA | 1 | 1 | 1 | 1 | 1 | |
| 19 | 90111–05011 | TORNILLO | 2 | 2 | 2 | 2 | 2 | |
| 20 | 5VK–F137Y–00 | GUIA DE AIRE | 1 | 1 | 1 | 1 | 1 | |
| 21 | 5VK–28371–00 | AMORTIGUADOR | 1 | 1 | 1 | 1 | 1 | |
| 22 | 90480–01141 | TAPON | 2 | 2 | 2 | 2 | 2 | |
| 23 | 90269–06008 | REMACHE | 4 | 4 | 4 | 4 | 4 | |
| 24 | 5VK–2416F–00 | AISLANTE, DOPOSITO DE COMBUS. | 1 | 1 | 1 | 1 | 1 | |
| 25 | 5VK–F413B–01 | EMBLEMA | 1 | 1 | 1 | 1 | 1 | UR |

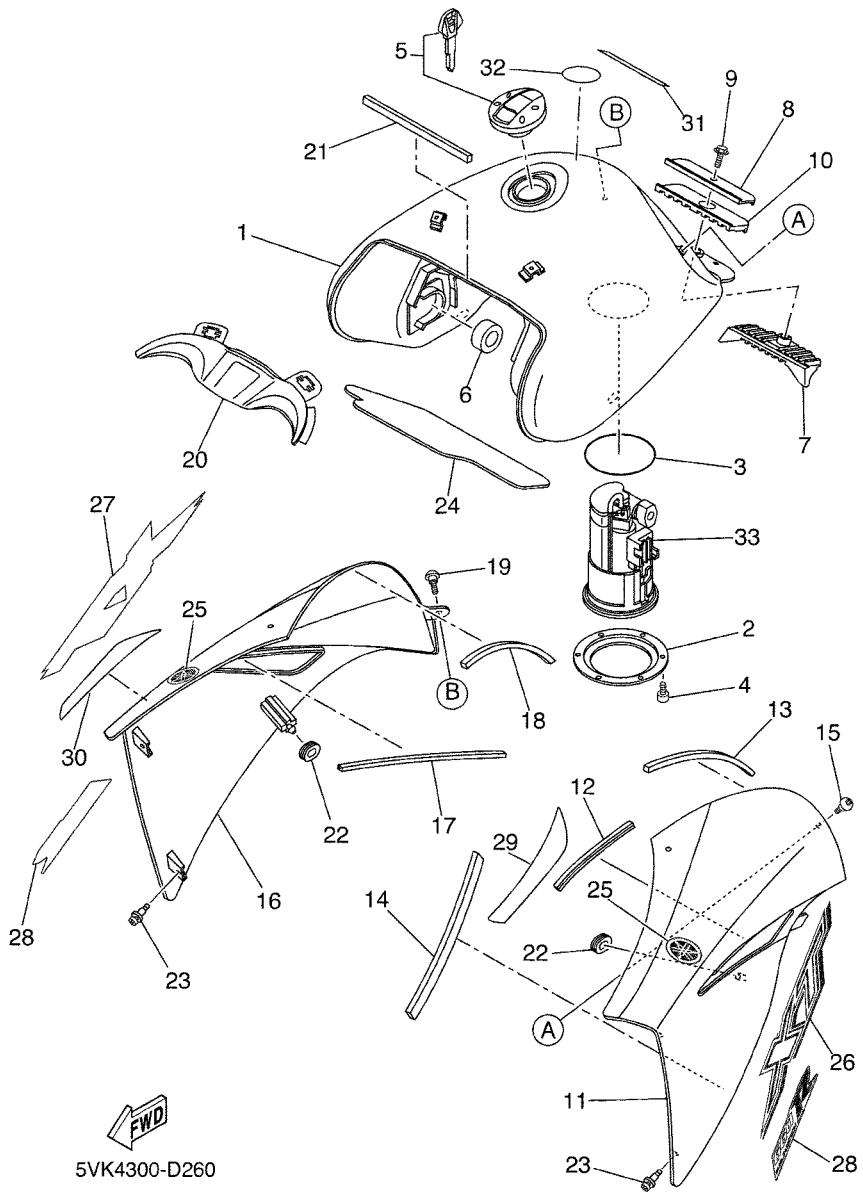


## FIG. 26 DEPOSITO DE COMBUSTIBLE

| REF. Nº | CODIGO Nº | DESCRIPCION | 01 | 02 | 03 | 04 | 05 | OBSERVACIONES |
|---|---|---|---|---|---|---|---|---|
| 25 | 5VK–F413B–01 | EMBLEMA | 1 | 1 | 1 | 1 | 1 | UR |
| 26 | 5VK–2173L–00 | JUEGO DE CALCOMANIAS | 1 | 1 | 1 | 1 | 1 | UR FOR DPBSE |
| | 5VK–2173L–20 | JUEGO DE CALCOMANIAS | 1 | 1 | 1 | 1 | 1 | UR FOR DNMD |
| 27 | 5VK–2174L–00 | JUEGO DE CALCOMANIAS | 1 | 1 | 1 | 1 | 1 | UR FOR DPBSE |
| | 5VK–2174L–20 | JUEGO DE CALCOMANIAS | 1 | 1 | 1 | 1 | 1 | UR FOR DNMD |
| 28 | 5VK–21788–00 | CALCOMANIA | 2 | 2 | 2 | 2 | 2 | UR FOR DPBSE |
| | 5VK–21788–20 | CALCOMANIA | 2 | 2 | 2 | 2 | 2 | UR FOR DNMD |
| 29 | 1D2–24161–00 | EMBLEMA 1 | 1 | 1 | 1 | 1 | 1 | UR FOR DNMD |
| 30 | 1D2–24162–00 | EMBLEMA 2 | 1 | 1 | 1 | 1 | 1 | UR FOR DNMD |
| 31 | 5WW–F1568–00 | ETIQUETA DE PRECAUCION | 1 | 1 | 1 | 1 | 1 | |
| 32 | 5DN–F415A–10 | ETIQUETA DE PRECAUCION | 1 | 1 | 1 | 1 | 1 | |
| 33 | 5VK–13907–01 | BOMBA DE COMBUSTIBLE COMPLETA | 1 | 1 | 1 | 1 | 1 | |

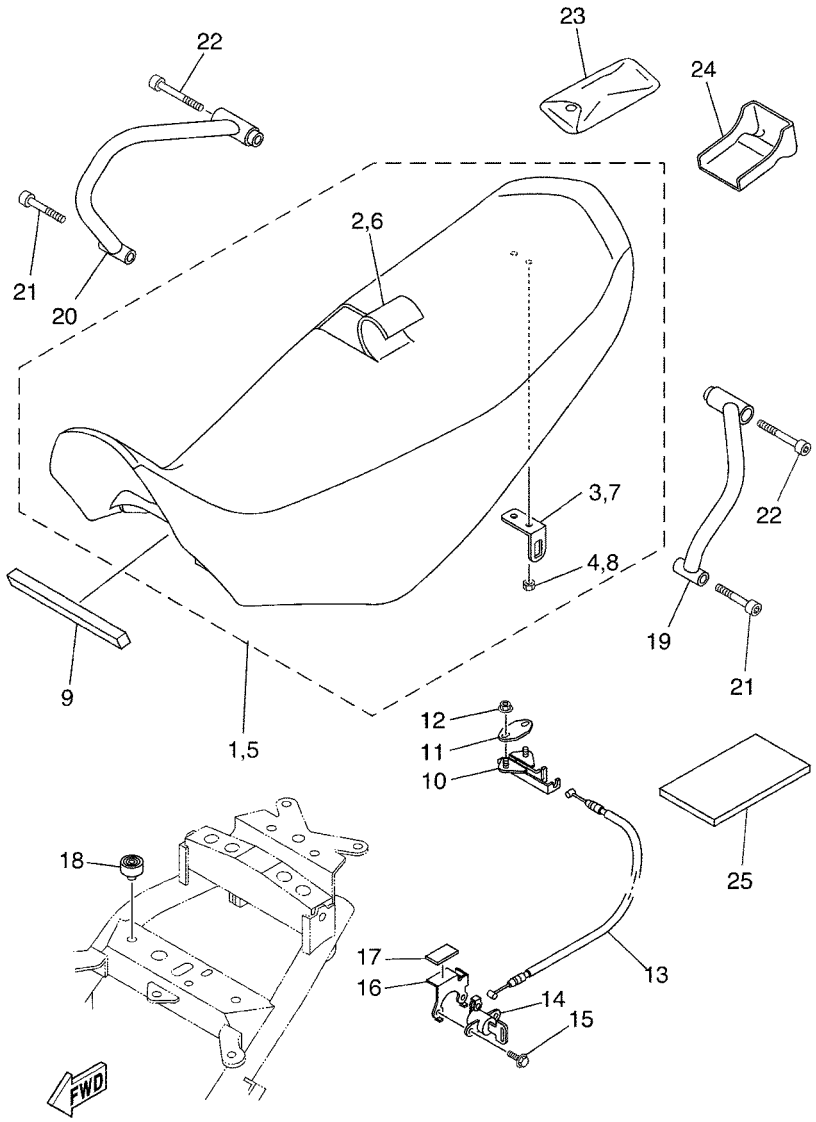


1D21300-C270

## FIG. 27 ASIENTO

| REF. Nº | CODIGO Nº | DESCRIPCION | 01 | 02 | 03 | 04 | 05 | OBSERVACIONES |
|---|---|---|---|---|---|---|---|---|
| 1 | 5VK–F4770–11 | ASIENTO SEMI-DOBLE COMPLETO | 1 | 1 | 1 | 1 | 1 | UR FOR DPBSE |
| 2 | 5VK–24731–11 | .FUNDA DE SILLIN | 1 | 1 | 1 | 1 | 1 | BLUE/BLACK |
| 3 | 4HM–24728–00 | .SOPORTE DE ASIENTO | 1 | 1 | 1 | 1 | 1 | |
| 4 | 90179–06635 | .TUERCA | 1 | 1 | 1 | 1 | 1 | |
| 5 | 5VK–F4770–01 | ASIENTO SEMI-DOBLE COMPLETO | 1 | 1 | 1 | 1 | 1 | UR FOR DNMD |
| 6 | 5VK–24731–01 | .FUNDA DE SILLIN | 1 | 1 | 1 | 1 | 1 | DARK GRAY/BLACK |
| 7 | 4HM–24728–00 | .SOPORTE DE ASIENTO | 1 | 1 | 1 | 1 | 1 | |
| 8 | 90179–06635 | .TUERCA | 1 | 1 | 1 | 1 | 1 | |
| 9 | 5VK–24737–00 | AMORTIGUADOR DE ASIENTO | 1 | 1 | 1 | 1 | 1 | |
| 10 | 4BP–24780–00 | CERRADURA SILLIN COMPLETO | 1 | 1 | 1 | 1 | 1 | |
| 11 | 5VK–F4792–00 | PLACA | 1 | 1 | 1 | 1 | 1 | |
| 12 | 95707–06500 | TUERCA DE BRIDA | 2 | 2 | 2 | 2 | 2 | |
| 13 | 5VK–F478E–00 | CABLE | 1 | 1 | 1 | 1 | 1 | |
| 14 | 2TV–W2470–00 | ASIENTO DE CIERRE COMPLETO | 1 | 1 | 1 | 1 | 1 | |
| 15 | 95027–06014 | PERNO, DE BRIDA | 2 | 2 | 2 | 2 | 2 | |
| 16 | 5VK–F478X–00 | SOPORTE | 1 | 1 | 1 | 1 | 1 | |
| 17 | 5VK–24747–00 | AMORTIGUADOR DE ASIENTO | 1 | 1 | 1 | 1 | 1 | |
| 18 | 3VL–F4741–10 | COJIN DE ASIENTO | 2 | 2 | 2 | 2 | 2 | |
| 19 | 5VK–F474A–00 | FIADOR DE EMPUNADURA | 1 | 1 | 1 | 1 | 1 | |
| 20 | 5VK–F474W–00 | FIADOR DE EMPUNADURA 2 | 1 | 1 | 1 | 1 | 1 | |
| 21 | 90110–08232 | TORNILLO ALLEN | 2 | 2 | 2 | 2 | 2 | |
| 22 | 91317–08050 | PERNO | 2 | 2 | 2 | 2 | 2 | |
| 23 | 5VK–F8100–00 | JUEGO DE HERRAMIENTAS | 1 | 1 | 1 | 1 | 1 | |
| 24 | 5VK–F8116–00 | HERRAMIENTA ESPECIAL | 1 | 1 | 1 | 1 | 1 | |
| 25 | 5VK–F8199–E0 | MANUAL DEL PROPRIETARIO | | 1 | 1 | | 1 | UR ENGLISH |
| | 5VK–F8199–F0 | MANUAL DEL PROPRIETARIO | 1 | 1 | | 1 | | UR FRENCH |
| | 5VK–F8199–P0 | MANUAL DEL PROPRIETARIO | | | | 1 | | UR PORTUGUESE |

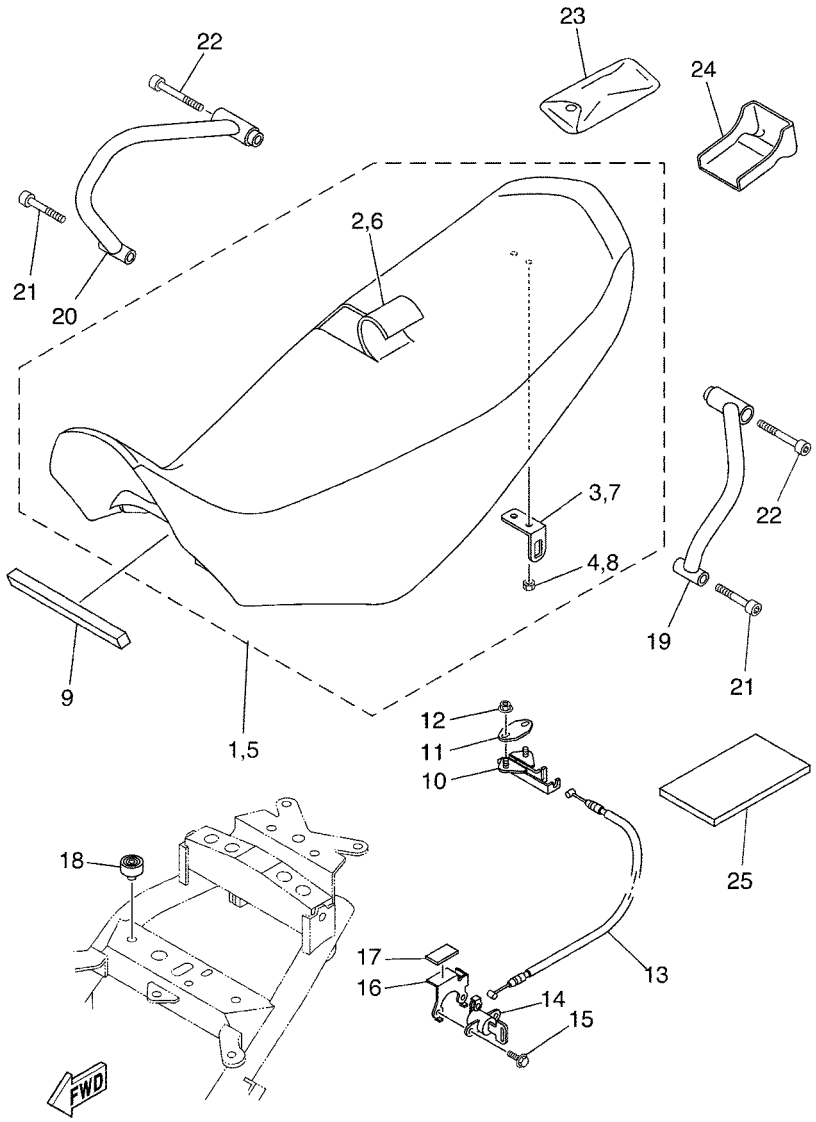

1D21300-C270

## FIG. 27 ASIENTO

| REF. Nº | CODIGO Nº | DESCRIPCION | 01 | 02 | 03 | 04 | 05 | OBSERVACIONES |
|---|---|---|---|---|---|---|---|---|
| 25 | 5VK–F8199–S0 | MANUAL DEL PROPRIETARIO | | | | 1 | | UR SPANISH |
| | 5VK–F8199–D0 | MANUAL DEL PROPRIETARIO | | | | 1 | | UR DUTCH |
| | 5VK–F8199–G0 | MANUAL DEL PROPRIETARIO | 1 | 1 | | | | UR GERMAN |
| | 5VK–F8199–H0 | MANUAL DEL PROPRIETARIO | 1 | 1 | | | | UR ITALIAN |

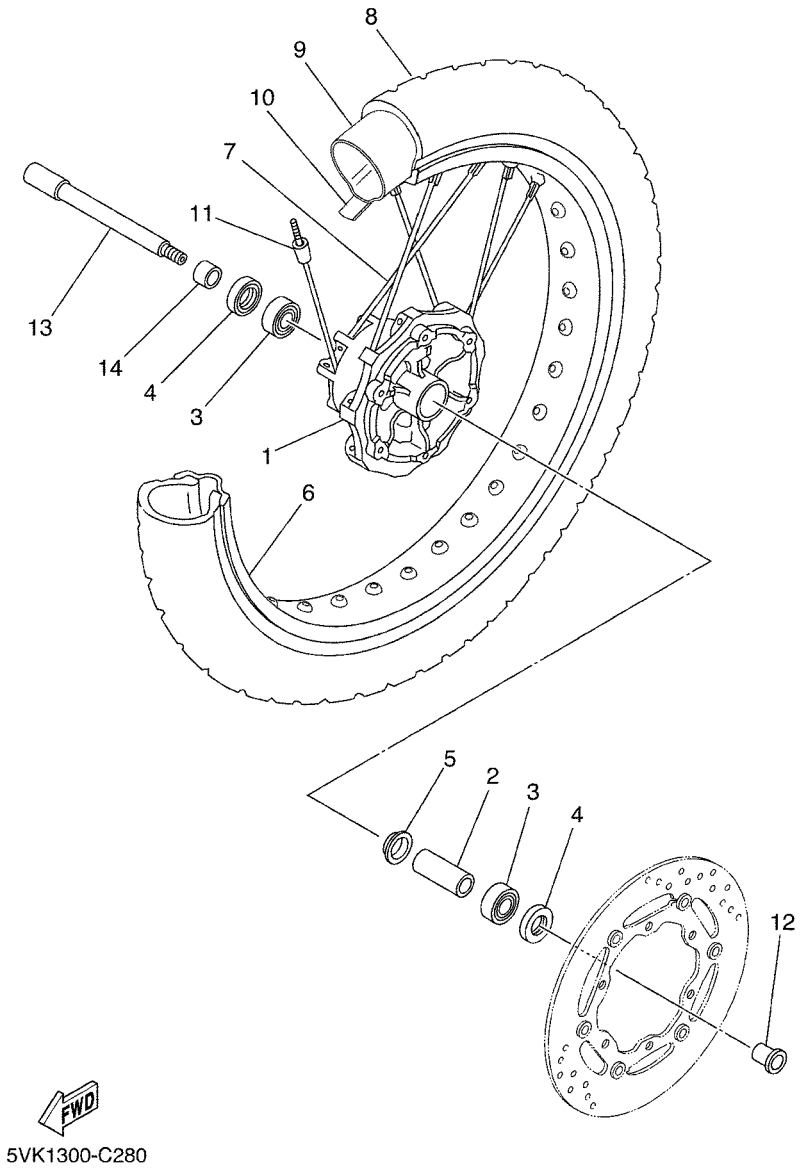


## FIG. 28 RUEDA DELANTERA

| REF. Nº | CODIGO Nº | DESCRIPCION | 01 | 02 | 03 | 04 | 05 | OBSERVACIONES |
|---|---|---|---|---|---|---|---|---|
| 1 | 5VK–25111–00 | MASA DELANTERA | 1 | 1 | 1 | 1 | 1 | |
| 2 | 5VK–25117–00 | ESPACIADOR DE COJINETE | 1 | 1 | 1 | 1 | 1 | |
| 3 | 93306–20348 | COJINETE | 2 | 2 | 2 | 2 | 2 | |
| 4 | 93106–23002 | SELLO ACEITE | 2 | 2 | 2 | 2 | 2 | |
| 5 | 136–25115–00 | BRIDA DE ESPACIADOR 1 | 1 | 1 | 1 | 1 | 1 | |
| 6 | 94418–21800 | ARO (1.85-21) | 1 | 1 | 1 | 1 | 1 | |
| 7 | 5VK–F5104–00 | JUEGO DE RAYOS DELANTERO | 1 | 1 | 1 | 1 | 1 | |
| 8 | * | NEUMATICO (90/90-21M/C 54S) | 1 | 1 | 1 | 1 | 1 | UR LM METZELER TO |
| | * | NEUMATICO (90/90-21M/C 54T) | 1 | 1 | 1 | 1 | 1 | UR LM MICHELIN SI |
| 9 | * | TUBO ( 21 ) | 1 | 1 | 1 | 1 | 1 | UR LM |
| | * | TUBO | 1 | 1 | 1 | 1 | 1 | UR LM |
| 10 | * | BANDA DE ARO (21) | 1 | 1 | 1 | 1 | 1 | UR LM |
| | * | BANDA DE ARO | 1 | 1 | 1 | 1 | 1 | UR LM |
| 11 | 3HT–25398–00 | CONTRAPESO DE RUEDA (15G) | 1 | 1 | 1 | 1 | 1 | |
| 12 | 5VK–F5183–00 | COLLAR DE RUEDA | 1 | 1 | 1 | 1 | 1 | |
| 13 | 5VK–25181–00 | EJE DE LA RUEDA | 1 | 1 | 1 | 1 | 1 | |
| 14 | 5VK–F5186–00 | COLLAR DE RUEDA | 1 | 1 | 1 | 1 | 1 | |

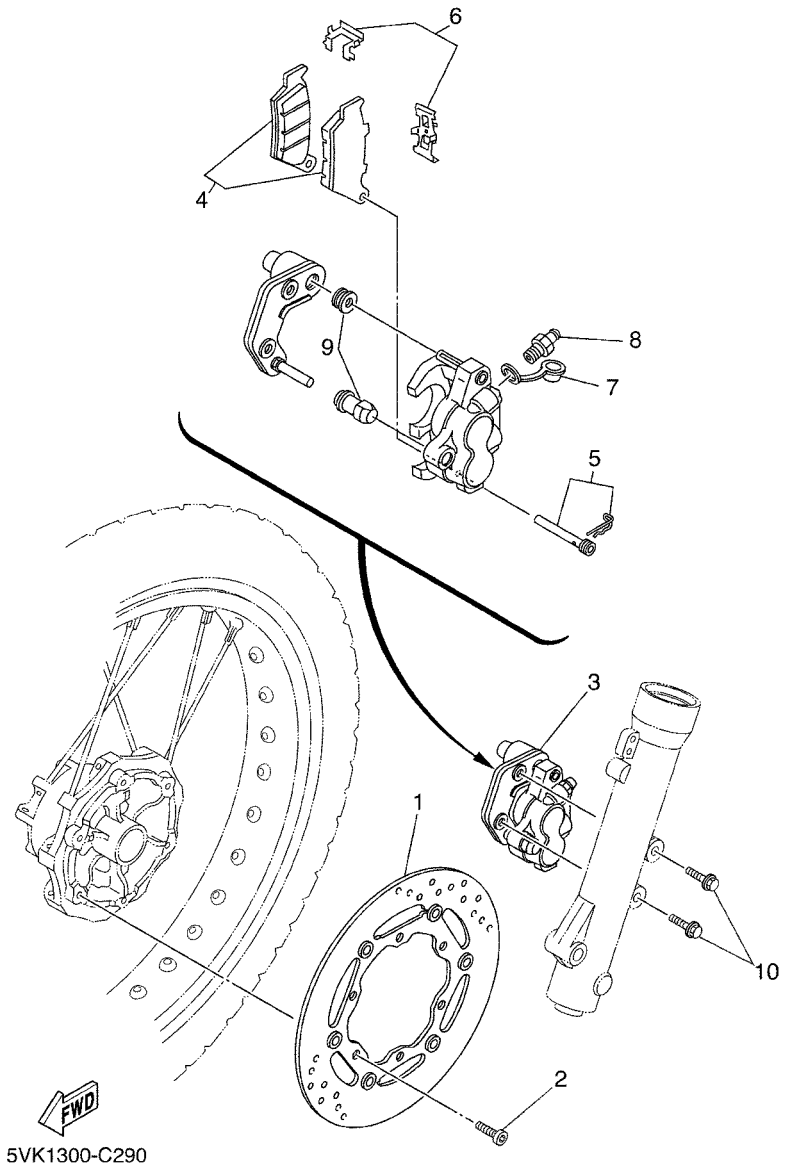


## FIG. 29 CALIBRE FRENO DELANTERA

| REF. Nº | CODIGO Nº | DESCRIPCION | 01 | 02 | 03 | 04 | 05 | OBSERVACIONES |
|---|---|---|---|---|---|---|---|---|
| 1 | 5VK–F581T–00 | DISCO DE FRENO | 1 | 1 | 1 | 1 | 1 | |
| 2 | 90111–08823 | TORNILLO | 6 | 6 | 6 | 6 | 6 | |
| 3 | 5VK–F580T–00 | CALIBRE COMPLETO (IZQUIERDO) | 1 | 1 | 1 | 1 | 1 | (BREMBO) |
| 4 | 5VK–W0045–00 | .JUEGO DE COJIN DE FRENO | 1 | 1 | 1 | 1 | 1 | (BREMBO) |
| 5 | 5VK–F5924–00 | .PASADOR | 1 | 1 | 1 | 1 | 1 | (BREMBO) |
| 6 | 5VK–F5919–00 | .SOPORTE DE PASTILLAS | 1 | 1 | 1 | 1 | 1 | (BREMBO) |
| 7 | 5DS–F5825–00 | .TAPA | 1 | 1 | 1 | 1 | 1 | (BREMBO) |
| 8 | 5SE–F5824–00 | .TORNILLO DE RESPIRADERO | 1 | 1 | 1 | 1 | 1 | (BREMBO) |
| 9 | 5DS–F5917–00 | .FUNDA DE CALIBRE | 1 | 1 | 1 | 1 | 1 | (BREMBO) |
| 10 | 90105–10069 | TORNILLO | 2 | 2 | 2 | 2 | 2 | |

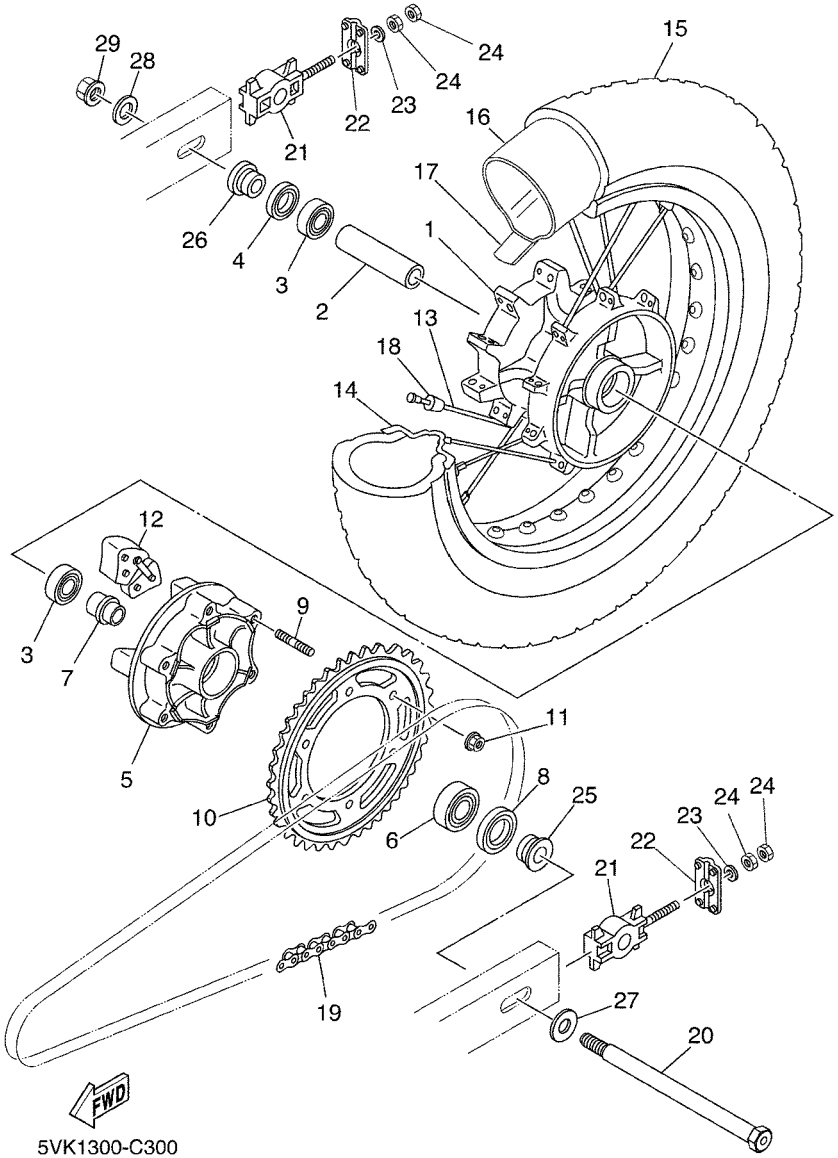


## FIG. 30 RUEDA TRASERA

| REF. Nº | CODIGO Nº | DESCRIPCION | 01 | 02 | 03 | 04 | 05 | OBSERVACIONES |
|---|---|---|---|---|---|---|---|---|
| 1 | 5VK–25311–00 | MASA TRASERA | 1 | 1 | 1 | 1 | 1 | |
| 2 | 90560–17306 | SEPARADOR | 1 | 1 | 1 | 1 | 1 | |
| 3 | 93306–20348 | COJINETE | 2 | 2 | 2 | 2 | 2 | |
| 4 | 93106–23002 | SELLO ACEITE | 1 | 1 | 1 | 1 | 1 | |
| 5 | 5VK–25366–00 | EMBRAGUE DE MASA | 1 | 1 | 1 | 1 | 1 | |
| 6 | 93306–30437 | COJINETE | 1 | 1 | 1 | 1 | 1 | |
| 7 | 1VJ–25377–00 | COLLAR DE RUEDA | 1 | 1 | 1 | 1 | 1 | |
| 8 | 93106–30029 | SELLO ACEITE | 1 | 1 | 1 | 1 | 1 | |
| 9 | 90116–10485 | ESPARRAGO | 6 | 6 | 6 | 6 | 6 | |
| 10 | 5VK–25445–01 | CORONA (45T) | 1 | 1 | 1 | 1 | 1 | |
| 11 | 95607–10200 | TUERCA DE AUTO-CIERRE | 6 | 6 | 6 | 6 | 6 | |
| 12 | 5Y1–25364–00 | AMORTIGUADOR | 4 | 4 | 4 | 4 | 4 | |
| 13 | 5VK–F5304–00 | JUEGO DE RAYOS TRASEROS | 1 | 1 | 1 | 1 | 1 | |
| 14 | 94427–17800 | ARO ( 4.25-17 ) | 1 | 1 | 1 | 1 | 1 | |
| 15 | * | NEUMATICO(130/80-17M/C 65S) | 1 | 1 | 1 | 1 | 1 | LM UR METZELER TO |
| | * | NEUMATICO(130/80-17M/C 65T) | 1 | 1 | 1 | 1 | 1 | LM UR MICHELIN SI |
| 16 | * | TUBO ( 21 ) | 1 | 1 | 1 | 1 | 1 | LM UR |
| | * | TUBO | 1 | 1 | 1 | 1 | 1 | LM UR |
| 17 | * | BANDA DE ARO (21) | 1 | 1 | 1 | 1 | 1 | LM UR |
| | * | BANDA DE ARO | 1 | 1 | 1 | 1 | 1 | LM UR |
| 18 | 3HT–25398–00 | CONTRAPESO DE RUEDA (15G) | 1 | 1 | 1 | 1 | 1 | |
| 19 | 94568–B2110 | CADENA | 1 | 1 | 1 | 1 | 1 | |
| 20 | 3AJ–25381–01 | EJE DE RUEDA | 1 | 1 | 1 | 1 | 1 | |
| 21 | 1UF–25388–00 | TIRADOR DE CADENA 1 | 2 | 2 | 2 | 2 | 2 | |
| 22 | 5VK–F2174–00 | EXTREMO 1 | 2 | 2 | 2 | 2 | 2 | |
| 23 | 92907–08600 | ARANDELA | 2 | 2 | 2 | 2 | 2 | |
| 24 | 95307–08600 | TUERCA | 4 | 4 | 4 | 4 | 4 | |

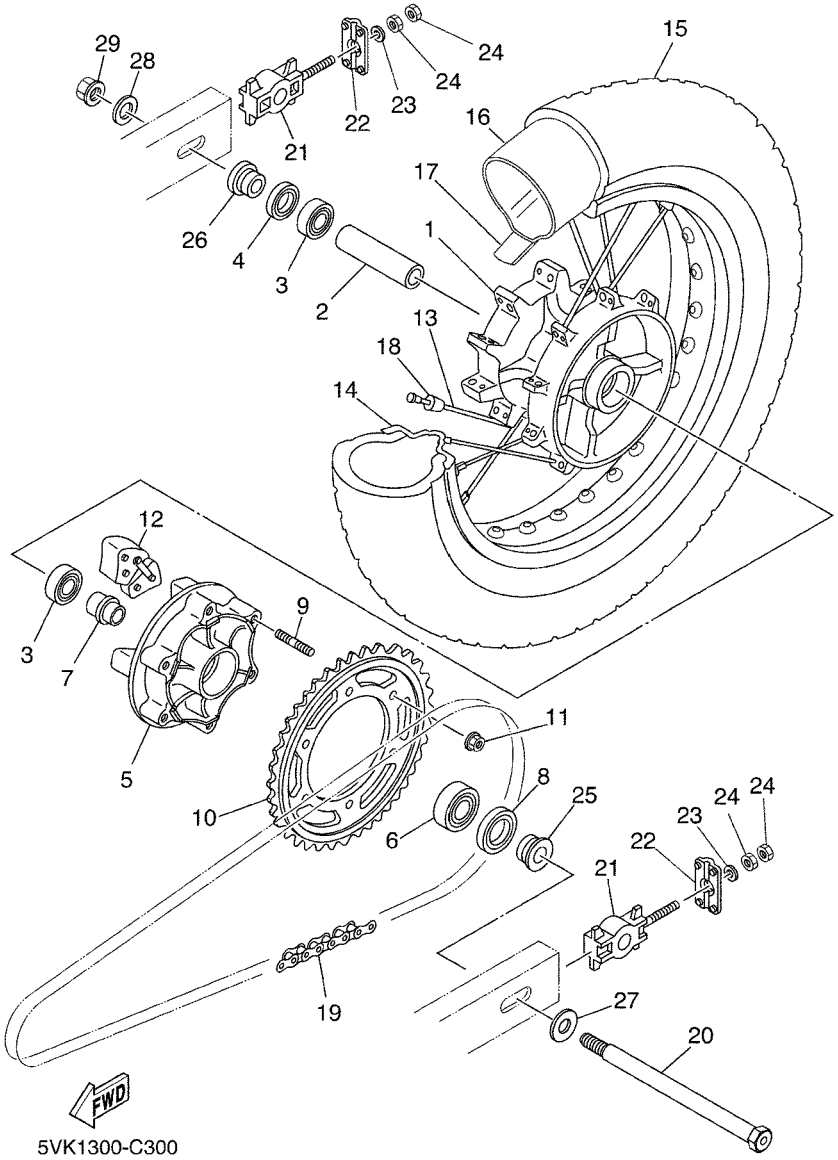


## FIG. 30 RUEDA TRASERA

| REF. Nº | CODIGO Nº | DESCRIPCION | 01 | 02 | 03 | 04 | 05 | OBSERVACIONES |
|---|---|---|---|---|---|---|---|---|
| 25 | 90387–17801 | ESPACIADOR | 1 | 1 | 1 | 1 | 1 | |
| 26 | 90387–17802 | ESPACIADOR | 1 | 1 | 1 | 1 | 1 | |
| 27 | 90201–170T3 | ARANDELA PLANA | 1 | 1 | 1 | 1 | 1 | |
| 28 | 90201–160T2 | ARANDELA PLANA | 1 | 1 | 1 | 1 | 1 | |
| 29 | 95604–16200 | TUERCA DE AUTO-CIERRE | 1 | 1 | 1 | 1 | 1 | |

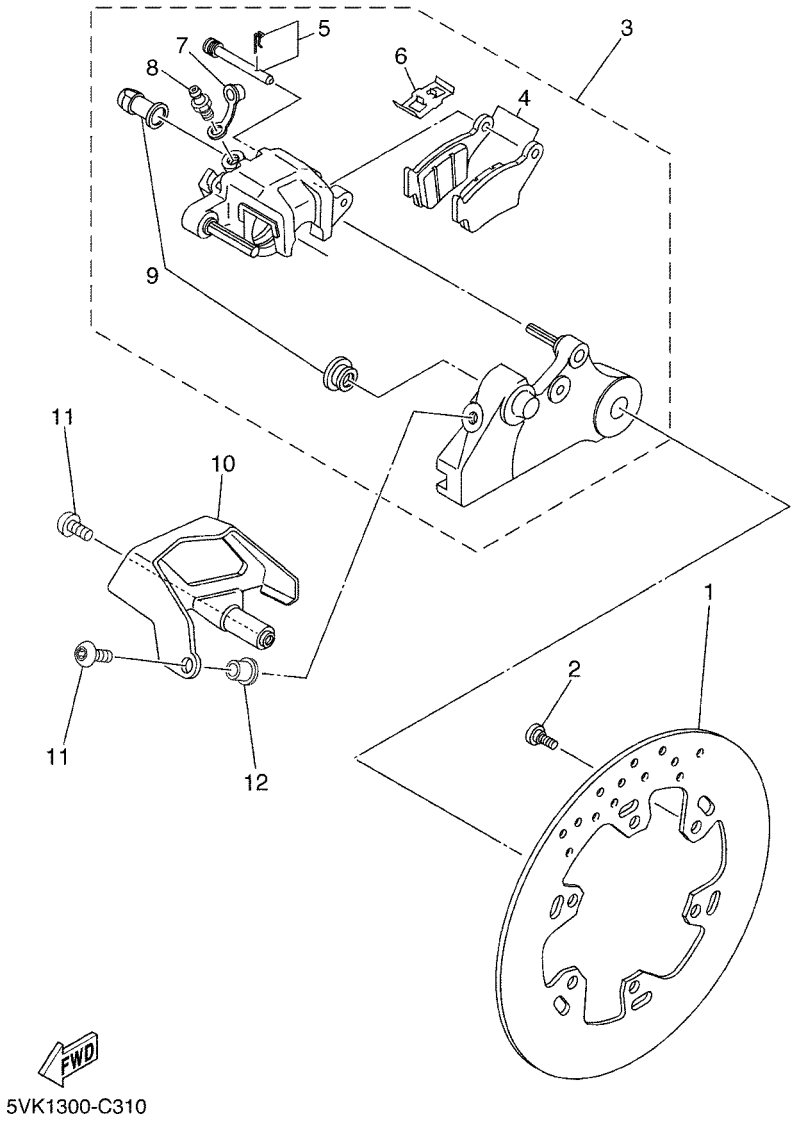


## FIG. 31 CALIBRE FRENO TRASERA

| REF. Nº | CODIGO Nº | DESCRIPCION | 01 | 02 | 03 | 04 | 05 | OBSERVACIONES |
|---|---|---|---|---|---|---|---|---|
| 1 | 5VK–F582W–00 | DISCO DE FRENO TRASEROS 2 | 1 | 1 | 1 | 1 | 1 | |
| 2 | 90109–06816 | PERNO | 6 | 6 | 6 | 6 | 6 | |
| 3 | 5VK–F580W–00 | CALIBRE COMPLETO TRASEROS 2 | 1 | 1 | 1 | 1 | 1 | (BREMBO) |
| 4 | 5VK–W0046–00 | .JUEGO DE PASTILLAS DE FRENO 2 | 1 | 1 | 1 | 1 | 1 | (BREMBO) |
| 5 | 5VK–F5924–10 | .PASADOR | 1 | 1 | 1 | 1 | 1 | (BREMBO) |
| 6 | 5VK–F5919–10 | .SOPORTE DE PASTILLAS | 1 | 1 | 1 | 1 | 1 | (BREMBO) |
| 7 | 5DS–F5825–00 | .TAPA | 1 | 1 | 1 | 1 | 1 | (BREMBO) |
| 8 | 5SE–F5824–00 | .TORNILLO DE RESPIRADERO | 1 | 1 | 1 | 1 | 1 | (BREMBO) |
| 9 | 5DS–F5917–00 | .FUNDA DE CALIBRE | 1 | 1 | 1 | 1 | 1 | (BREMBO) |
| 10 | 5CH–F7491–00 | PROTECTOR | 1 | 1 | 1 | 1 | 1 | |
| 11 | 90111–06029 | TORNILLO | 2 | 2 | 2 | 2 | 2 | |
| 12 | 90387–06852 | ESPACIADOR | 1 | 1 | 1 | 1 | 1 | |

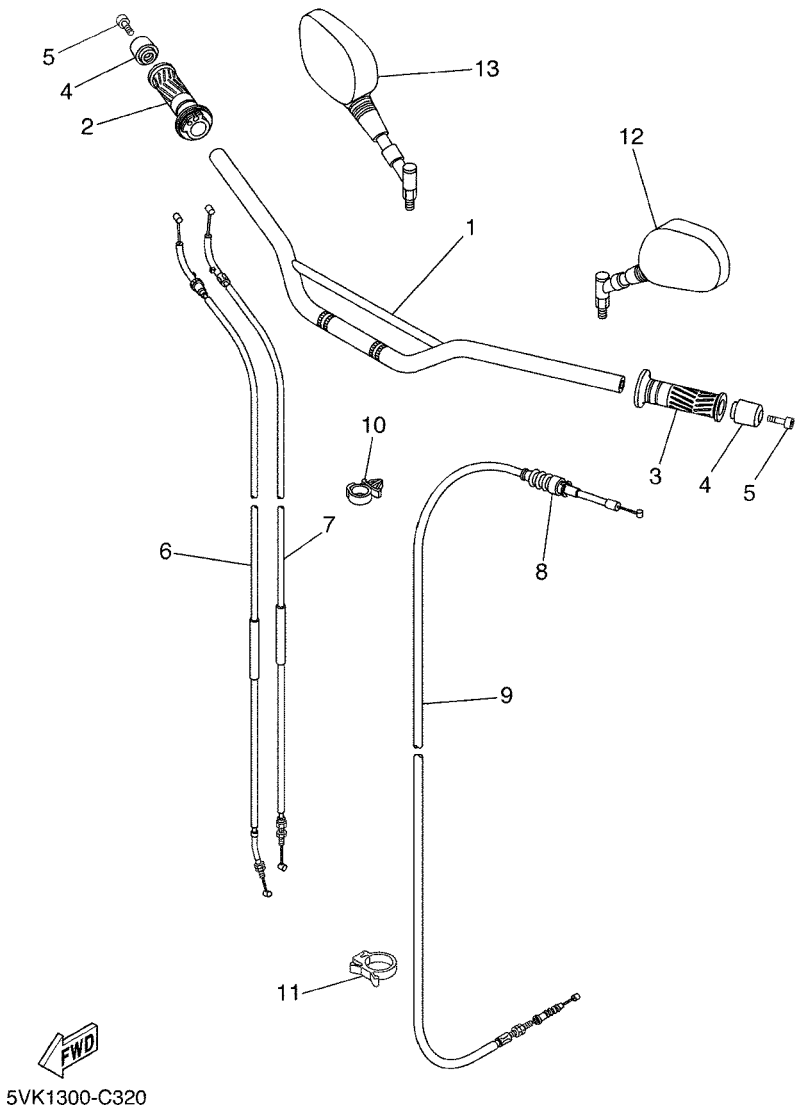


## FIG. 32 MANILLAR & CABLE

| REF. Nº | CODIGO Nº | DESCRIPCION | 01 | 02 | 03 | 04 | 05 | OBSERVACIONES |
|---|---|---|---|---|---|---|---|---|
| 1 | 5VK–F6110–00 | MANUBRIO COMPLETE | 1 | 1 | 1 | 1 | 1 | |
| 2 | 4YR–26240–02 | EMPUNADURA COMPLETA | 1 | 1 | 1 | 1 | 1 | |
| 3 | 4YR–26241–02 | EMPUNADURA (IZQUIERDO) | 1 | 1 | 1 | 1 | 1 | |
| 4 | 4JH–26246–00 | EXTREMO DE EMPUNADURA | 2 | 2 | 2 | 2 | 2 | |
| 5 | 91317–06035 | PERNO | 2 | 2 | 2 | 2 | 2 | |
| 6 | 5VK–F6311–00 | CABLE DE ACELERADOR 1 | 1 | 1 | 1 | 1 | 1 | |
| 7 | 5VK–F6312–00 | CABLE DE ACELERADOR 2 | 1 | 1 | 1 | 1 | 1 | |
| 8 | 1E6–26342–00 | FUNDA DE CABLE | 1 | 1 | 1 | 1 | 1 | |
| 9 | 5VK–F6335–00 | CABLE DE EMBRAGUE | 1 | 1 | 1 | 1 | 1 | |
| 10 | 90464–12001 | BRIDA | 1 | 1 | 1 | 1 | 1 | |
| 11 | 90464–18004 | BRIDA | 1 | 1 | 1 | 1 | 1 | |
| 12 | 5VK–F6280–00 | ESPEJO COMPLETO (IZQUIERDO) | 1 | 1 | 1 | 1 | 1 | |
| 13 | 5VK–F6290–00 | ESPEJO COMPLETO (DERECHO) | 1 | 1 | 1 | 1 | 1 | |

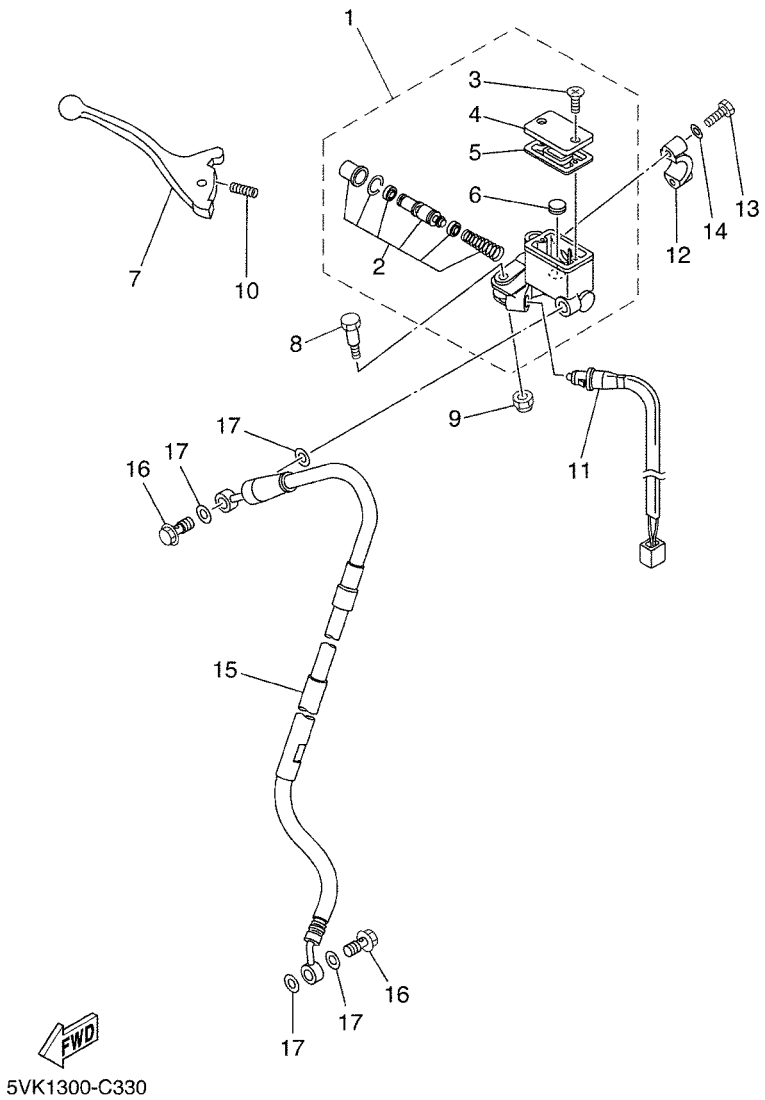


## FIG. 33 CILINDRO MAESTRO DELANTERO

| REF. Nº | CODIGO Nº | DESCRIPCION | 01 | 02 | 03 | 04 | 05 | OBSERVACIONES |
|---|---|---|---|---|---|---|---|---|
| 1 | 5VK–W2587–00 | CILINDRO MAESTRO SUB COMPLET | 1 | 1 | 1 | 1 | 1 | |
| 2 | 3XP–W0041–00 | .JUEGO DE CILINDRO MAESTRO | 1 | 1 | 1 | 1 | 1 | |
| 3 | 98706–04012 | .TORNILLO DE CABEZA PLANA | 2 | 2 | 2 | 2 | 2 | |
| 4 | 3GM–W2585–21 | .TAPA DE TANQUE DE RESERVA | 1 | 1 | 1 | 1 | 1 | |
| 5 | 55U–25854–00 | .DIAFRAGMA TANQUE RESERVA | 1 | 1 | 1 | 1 | 1 | |
| 6 | 5CG–25715–00 | .SEPARADOR | 1 | 1 | 1 | 1 | 1 | |
| 7 | 5VK–83922–00 | PALANCA 2 | 1 | 1 | 1 | 1 | 1 | |
| 8 | 90109–06577 | PERNO | 1 | 1 | 1 | 1 | 1 | |
| 9 | 95606–06100 | TUERCA U | 1 | 1 | 1 | 1 | 1 | |
| 10 | 90501–10312 | RESORTE DE COMPRESION | 1 | 1 | 1 | 1 | 1 | |
| 11 | 5VK–83980–00 | INTERRUP. DE PARADA DELANTERO | 1 | 1 | 1 | 1 | 1 | |
| 12 | 56A–25867–00 | SOPORTE DE CILINDRO MAESTRO | 1 | 1 | 1 | 1 | 1 | |
| 13 | 97007–06025 | PERNO | 2 | 2 | 2 | 2 | 2 | |
| 14 | 92907–06600 | ARANDELA | 2 | 2 | 2 | 2 | 2 | |
| 15 | 5VK–F5872–00 | MANGUERA DE FRENO 1 | 1 | 1 | 1 | 1 | 1 | |
| 16 | 90401–10X03 | PERNO DE UNION | 2 | 2 | 2 | 2 | 2 | |
| 17 | 90201–10X03 | ARANDELA PLANA | 4 | 4 | 4 | 4 | 4 | |

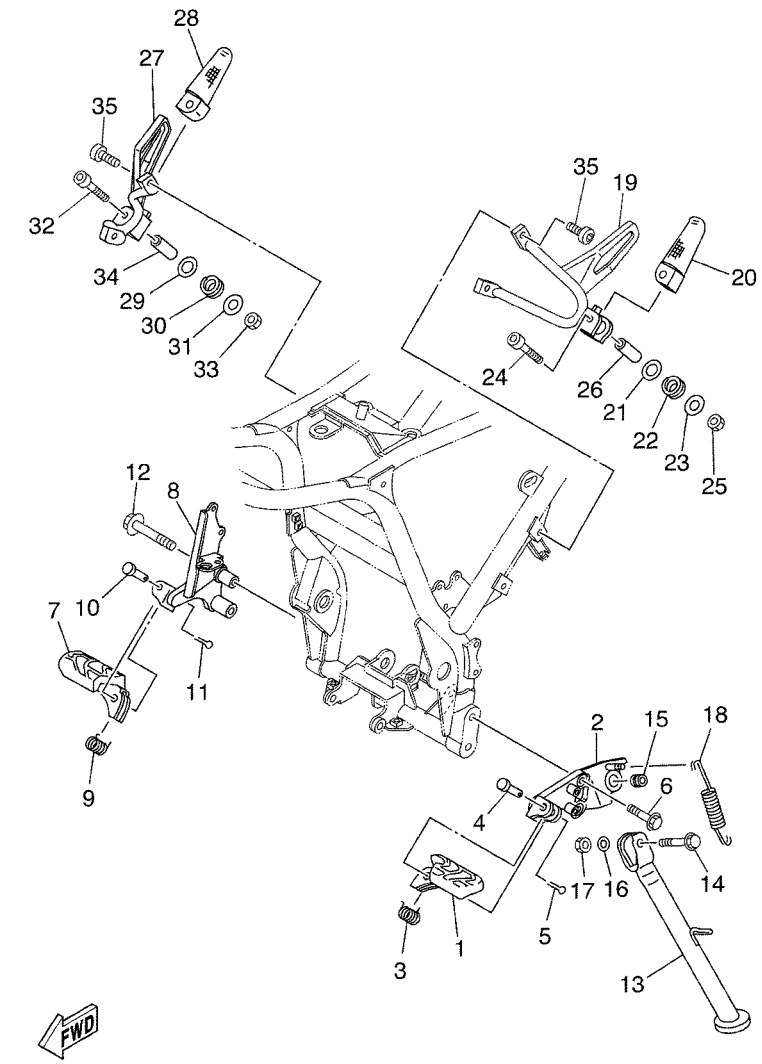


5VK1300-C340

## FIG. 34 SOPORTE & APOYAPIE

| REF. Nº | CODIGO Nº | DESCRIPCION | 01 | 02 | 03 | 04 | 05 | OBSERVACIONES |
|---|---|---|---|---|---|---|---|---|
| 1 | 5VK–27411–00 | APOYAPIE 1 | 1 | 1 | 1 | 1 | 1 | |
| 2 | 5VK–F7412–00 | SOPORTE DE APOYAPIE 1 | 1 | 1 | 1 | 1 | 1 | |
| 3 | 90508–20801 | RESORTE DE TORSION | 1 | 1 | 1 | 1 | 1 | |
| 4 | 90240–10800 | PASADOR CON HOYO | 1 | 1 | 1 | 1 | 1 | |
| 5 | 91401–25020 | PASADOR DE CHAVETA | 1 | 1 | 1 | 1 | 1 | |
| 6 | 90105–10813 | TORNILLO | 2 | 2 | 2 | 2 | 2 | |
| 7 | 5VK–27421–00 | APOYAPIE 2 | 1 | 1 | 1 | 1 | 1 | |
| 8 | 5VK–F7422–00 | SOPORTE DE APOYAPIE 2 | 1 | 1 | 1 | 1 | 1 | |
| 9 | 90508–20802 | RESORTE DE TORSION | 1 | 1 | 1 | 1 | 1 | |
| 10 | 90240–10800 | PASADOR CON HOYO | 1 | 1 | 1 | 1 | 1 | |
| 11 | 91401–25020 | PASADOR DE CHAVETA | 1 | 1 | 1 | 1 | 1 | |
| 12 | 90105–10811 | TORNILLO | 2 | 2 | 2 | 2 | 2 | |
| 13 | 5VK–F7311–00 | PUNTAL LATERAL | 1 | 1 | 1 | 1 | 1 | |
| 14 | 90105–10814 | TORNILLO | 1 | 1 | 1 | 1 | 1 | |
| 15 | 90387–10020 | ESPACIADOR | 1 | 1 | 1 | 1 | 1 | |
| 16 | 90201–101J1 | ARANDELA PLANA | 1 | 1 | 1 | 1 | 1 | |
| 17 | 95617–10100 | PERNO DE PUNTAL | 1 | 1 | 1 | 1 | 1 | |
| 18 | 90506–20002 | RESORTE DE TENSION | 1 | 1 | 1 | 1 | 1 | |
| 19 | 5VK–F741L–00 | MENSULA 4 | 1 | 1 | 1 | 1 | 1 | |
| 20 | 5VK–F7431–00 | APOYAPIE POSTERIOR 1 | 1 | 1 | 1 | 1 | 1 | |
| 21 | 90201–10430 | ARANDELA PLANA | 1 | 1 | 1 | 1 | 1 | |
| 22 | 90504–18005 | RESORTE DE COMPRESION | 1 | 1 | 1 | 1 | 1 | |
| 23 | 90201–06060 | ARANDELA PLANA | 1 | 1 | 1 | 1 | 1 | |
| 24 | 91317–06040 | PERNO | 1 | 1 | 1 | 1 | 1 | |
| 25 | 95607–06100 | TUERCA AUTOBLOCANTE | 1 | 1 | 1 | 1 | 1 | |
| 26 | 90387–06086 | ESPACIADOR | 1 | 1 | 1 | 1 | 1 | |
| 27 | 5VK–F742L–00 | MENSULA 5 | 1 | 1 | 1 | 1 | 1 | |

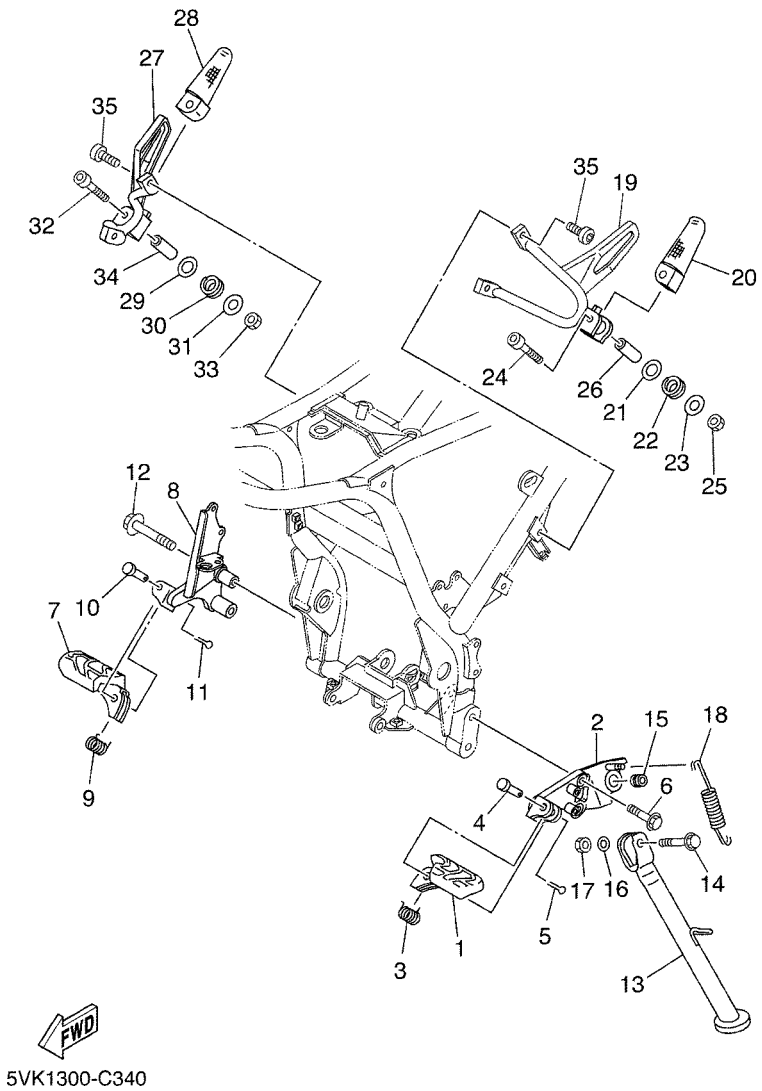


## FIG. 34 SOPORTE & APOYAPIE

| REF. Nº | CODIGO Nº | DESCRIPCION | 01 | 02 | 03 | 04 | 05 | OBSERVACIONES |
|---|---|---|---|---|---|---|---|---|
| 28 | 5VK–F7441–00 | APOYAPIE POSTERIOR 2 | 1 | 1 | 1 | 1 | 1 | |
| 29 | 90201–10430 | ARANDELA PLANA | 1 | 1 | 1 | 1 | 1 | |
| 30 | 90504–18005 | RESORTE DE COMPRESION | 1 | 1 | 1 | 1 | 1 | |
| 31 | 90201–06060 | ARANDELA PLANA | 1 | 1 | 1 | 1 | 1 | |
| 32 | 91317–06040 | PERNO | 1 | 1 | 1 | 1 | 1 | |
| 33 | 95607–06100 | TUERCA AUTOBLOCANTE | 1 | 1 | 1 | 1 | 1 | |
| 34 | 90387–06086 | ESPACIADOR | 1 | 1 | 1 | 1 | 1 | |
| 35 | 90110–08096 | TORNILLO ALLEN | 4 | 4 | 4 | 4 | 4 | |

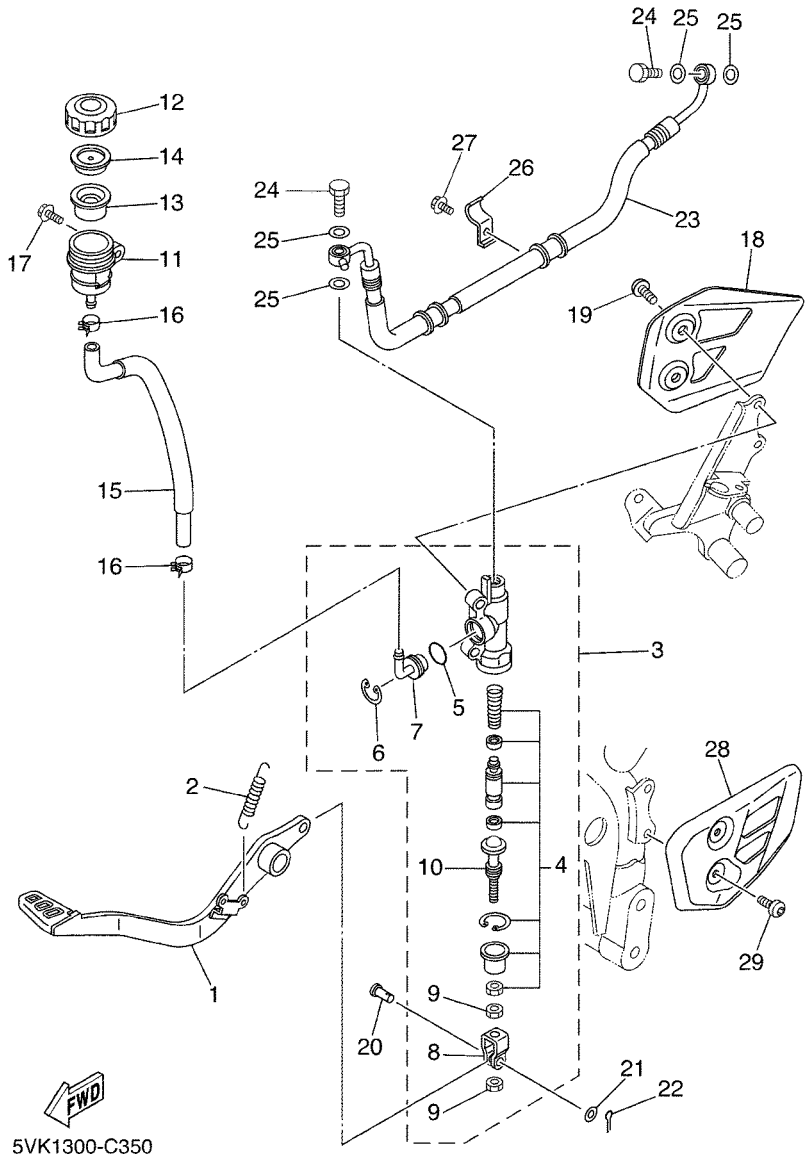


## FIG. 35 CILINDRO MAESTRO TRASERO

| REF. Nº | CODIGO Nº | DESCRIPCION | 01 | 02 | 03 | 04 | 05 | OBSERVACIONES |
|---|---|---|---|---|---|---|---|---|
| 1 | 5VK–F7211–00 | PEDAL DE FRENO | 1 | 1 | 1 | 1 | 1 | |
| 2 | 90506–20369 | RESORTE DE TENSION | 1 | 1 | 1 | 1 | 1 | |
| 3 | 5VK–2583V–00 | CILINDRO, MAESTRO TRASERO | 1 | 1 | 1 | 1 | 1 | |
| 4 | 3BN–W0042–50 | .JUEGO DE CILINDRO MAESTRO | 1 | 1 | 1 | 1 | 1 | |
| 5 | 93210–15620 | .ANILLO O | 1 | 1 | 1 | 1 | 1 | |
| 6 | 2VN–25866–00 | .PRESILLA REDONDA | 1 | 1 | 1 | 1 | 1 | |
| 7 | 4ML–2582A–50 | .CONECTOR | 1 | 1 | 1 | 1 | 1 | |
| 8 | 2YK–27222–00 | .UNION | 1 | 1 | 1 | 1 | 1 | |
| 9 | 4SS–27218–00 | .TUERCA | 2 | 2 | 2 | 2 | 2 | |
| 10 | 3KW–27234–00 | .PASADOR DE VARILLA DE FRENO | 1 | 1 | 1 | 1 | 1 | |
| 11 | 5JJ–25894–00 | TANQUE DE RESERVA | 1 | 1 | 1 | 1 | 1 | |
| 12 | 3XP–25852–50 | TAPA DE TANQUE DE RESERVA | 1 | 1 | 1 | 1 | 1 | |
| 13 | 2VN–25854–00 | DIAFRAGMA TANQUE RESERVA | 1 | 1 | 1 | 1 | 1 | |
| 14 | 2VN–25855–00 | BUJE DE DIAFRAGMA | 1 | 1 | 1 | 1 | 1 | |
| 15 | 5VK–25895–00 | MANGUERA DE TANQUE DE RESERVA | 1 | 1 | 1 | 1 | 1 | |
| 16 | 90467–12085 | PRESILLA | 2 | 2 | 2 | 2 | 2 | |
| 17 | 90119–06044 | TORNILLO CON ARANDELA | 1 | 1 | 1 | 1 | 1 | |
| 18 | 5VK–F117M–00 | CUBIERTA | 1 | 1 | 1 | 1 | 1 | |
| 19 | 90109–085G6 | PERNO | 2 | 2 | 2 | 2 | 2 | |
| 20 | 90240–08124 | PASADOR CON HOYO | 1 | 1 | 1 | 1 | 1 | |
| 21 | 90201–08083 | ARANDELA PLANA | 1 | 1 | 1 | 1 | 1 | |
| 22 | 91401–16012 | PASADOR DE CHAVETA | 1 | 1 | 1 | 1 | 1 | |
| 23 | 5VK–F5873–00 | MANGUERA DE FRENO 2 | 1 | 1 | 1 | 1 | 1 | |
| 24 | 90401–10X03 | PERNO DE UNION | 2 | 2 | 2 | 2 | 2 | |
| 25 | 90201–10X03 | ARANDELA PLANA | 4 | 4 | 4 | 4 | 4 | |
| 26 | 5VK–F5875–00 | SOPORTE DE MANGUERA FRENO 1 | 2 | 2 | 2 | 2 | 2 | |
| 27 | 95027–06012 | PERNO, DE BRIDA | 2 | 2 | 2 | 2 | 2 | |

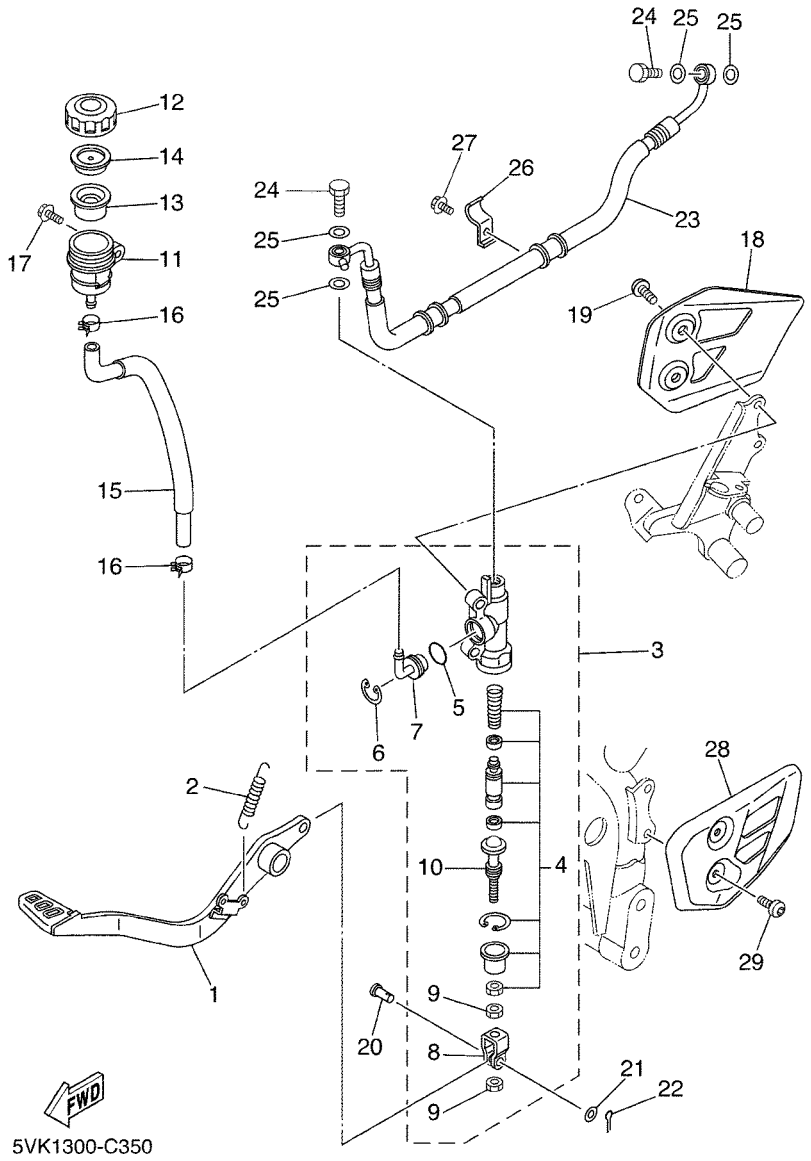


## FIG. 35 CILINDRO MAESTRO TRASERO

| REF. Nº | CODIGO Nº | DESCRIPCION | 01 | 02 | 03 | 04 | 05 | OBSERVACIONES |
|---|---|---|---|---|---|---|---|---|
| 28 | 5VK–F117F–00 | CUBIERTA | 1 | 1 | 1 | 1 | 1 | |
| 29 | 90149–06298 | TORNILLO DE REGLAJE | 2 | 2 | 2 | 2 | 2 | |

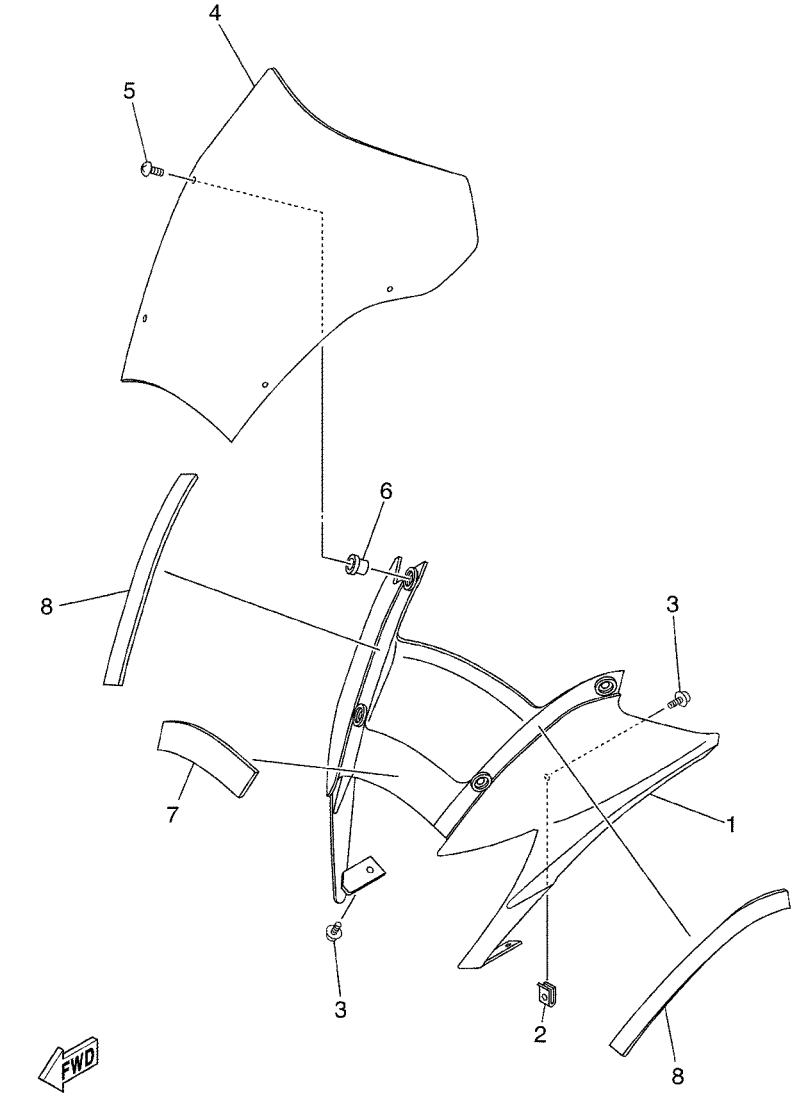


5VK1300-C360

## FIG. 36 BOVEDA 1

| REF. Nº | CODIGO Nº | DESCRIPCION | 01 | 02 | 03 | 04 | 05 | OBSERVACIONES |
|---|---|---|---|---|---|---|---|---|
| 1 | 5VK–F8351–00 | CUERPO DE COBERTURA | 1 | 1 | 1 | 1 | 1 | UR FOR DPBSE |
| | 5VK–F8351–20 | CUERPO DE COBERTURA | 1 | 1 | 1 | 1 | 1 | UR FOR DNMD |
| 2 | 90183–05061 | TUERCA DE RESORTE | 2 | 2 | 2 | 2 | 2 | |
| 3 | 90159–05083 | TORNILLO CON VALONA | 4 | 4 | 4 | 4 | 4 | |
| 4 | 5VK–F8381–00 | PARABRISA | 1 | 1 | 1 | 1 | 1 | BLACK |
| 5 | 90150–05023 | TORNILLO CABEZA REDONDA | 4 | 4 | 4 | 4 | 4 | |
| 6 | 90179–05523 | TUERCA | 4 | 4 | 4 | 4 | 4 | |
| 7 | 5VK–2837J–00 | AMORTIGUADOR | 1 | 1 | 1 | 1 | 1 | |
| 8 | 5VK–2837K–00 | AMORTIGUADOR 6 | 2 | 2 | 2 | 2 | 2 | |

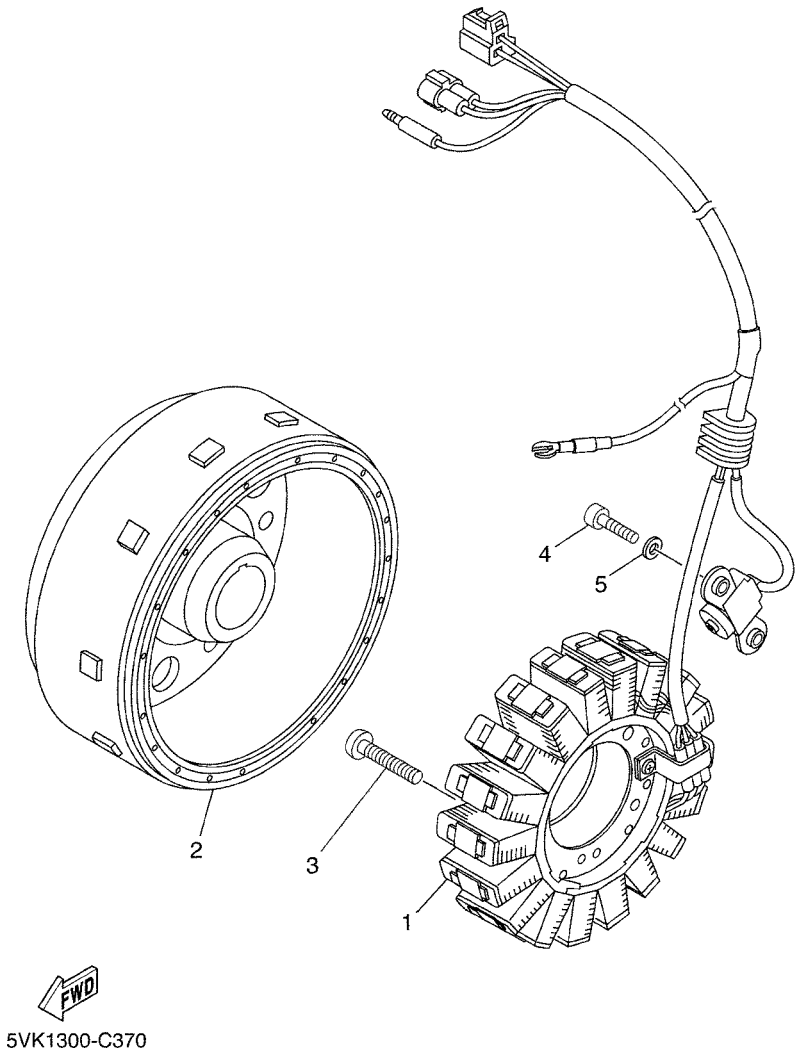


## FIG. 37 GENERADOR

| REF. Nº | CODIGO Nº | DESCRIPCION | 01 | 02 | 03 | 04 | 05 | OBSERVACIONES |
|---|---|---|---|---|---|---|---|---|
| 1 | 5VK–81410–00 | ESTATOR COMPLETO | 1 | 1 | 1 | 1 | 1 | |
| 2 | 5VK–81450–00 | ROTOR COMPLETO | 1 | 1 | 1 | 1 | 1 | |
| 3 | 92017–06030 | PERNO | 3 | 3 | 3 | 3 | 3 | |
| 4 | 91317–05014 | PERNO | 2 | 2 | 2 | 2 | 2 | |
| 5 | 90201–05X08 | ARANDELA PLANA | 2 | 2 | 2 | 2 | 2 | |

## FIG. 38 LUZ DE DESTELLADOR

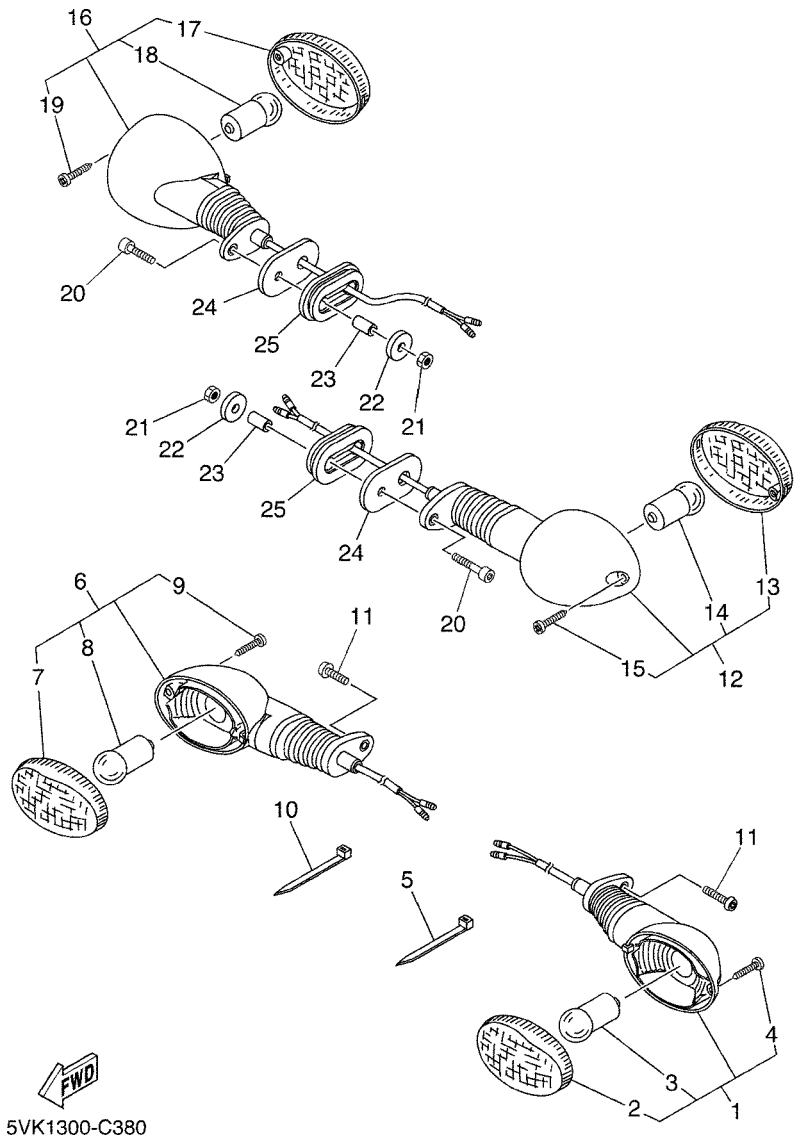


| REF. Nº | CODIGO Nº | DESCRIPCION | 01 | 02 | 03 | 04 | 05 | OBSERVACIONES |
|---|---|---|---|---|---|---|---|---|
| 1 | 5VK–H3310–00 | DESTELLADOR DE LUZ DELANT. | 1 | 1 | 1 | 1 | 1 | |
| 2 | 5VK–H333A–00 | .LENTES COMPLETO | 1 | 1 | 1 | 1 | 1 | |
| 3 | 5VK–H3311–00 | .BOMBILLA DE DESTELLADOR | 1 | 1 | 1 | 1 | 1 | |
| 4 | 5VK–H3333–00 | .TORNILLO ACCESORIO DE LENTE | 1 | 1 | 1 | 1 | 1 | |
| 5 | 90464–16061 | BRIDA | 1 | 1 | 1 | 1 | 1 | |
| 6 | 5VK–H3320–00 | DESTELLADOR DE LUZ DELANT. | 1 | 1 | 1 | 1 | 1 | |
| 7 | 5VK–H333A–00 | .LENTES COMPLETO | 1 | 1 | 1 | 1 | 1 | |
| 8 | 5VK–H3311–00 | .BOMBILLA DE DESTELLADOR | 1 | 1 | 1 | 1 | 1 | |
| 9 | 5VK–H3333–00 | .TORNILLO ACCESORIO DE LENTE | 1 | 1 | 1 | 1 | 1 | |
| 10 | 90464–16061 | BRIDA | 1 | 1 | 1 | 1 | 1 | |
| 11 | 92017–06014 | PERNO | 2 | 2 | 2 | 2 | 2 | |
| 12 | 5VK–H3330–00 | DESTELLADOR DE LUZ TRAS.COMPL. | 1 | 1 | 1 | 1 | 1 | |
| 13 | 5VK–H333A–00 | .LENTES COMPLETO | 1 | 1 | 1 | 1 | 1 | |
| 14 | 5VK–H3311–00 | .BOMBILLA DE DESTELLADOR | 1 | 1 | 1 | 1 | 1 | |
| 15 | 5VK–H3333–00 | .TORNILLO ACCESORIO DE LENTE | 1 | 1 | 1 | 1 | 1 | |
| 16 | 5VK–H3340–00 | DESTELLADOR DE LUZ TRAS.COMPL. | 1 | 1 | 1 | 1 | 1 | |
| 17 | 5VK–H333A–00 | .LENTES COMPLETO | 1 | 1 | 1 | 1 | 1 | |
| 18 | 5VK–H3311–00 | .BOMBILLA DE DESTELLADOR | 1 | 1 | 1 | 1 | 1 | |
| 19 | 5VK–H3333–00 | .TORNILLO ACCESORIO DE LENTE | 1 | 1 | 1 | 1 | 1 | |
| 20 | 91317–06035 | PERNO | 2 | 2 | 2 | 2 | 2 | |
| 21 | 95607–06100 | TUERCA AUTOBLOCANTE | 2 | 2 | 2 | 2 | 2 | |
| 22 | 90201–06026 | ARANDELA PLANA | 2 | 2 | 2 | 2 | 2 | |
| 23 | 90387–06088 | ESPACIADOR | 2 | 2 | 2 | 2 | 2 | |
| 24 | 5VK–83359–00 | ARANDELA ESPECIAL | 2 | 2 | 2 | 2 | 2 | |
| 25 | 5VK–83345–00 | TAPON CIEGO | 2 | 2 | 2 | 2 | 2 | |

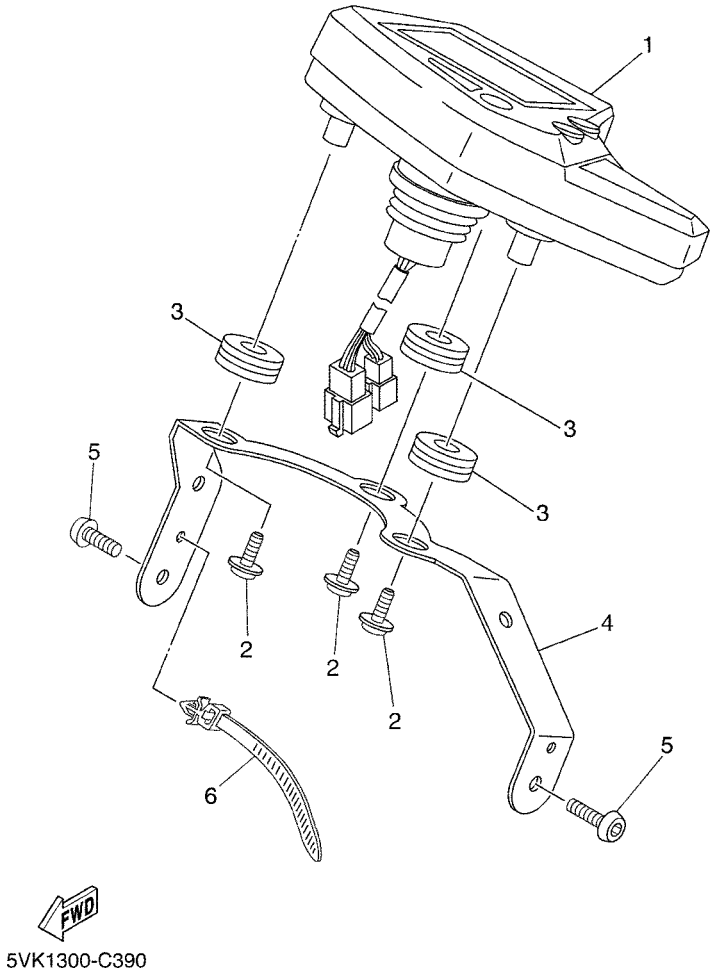


## FIG. 39 MEDIDOR

| REF. Nº | CODIGO Nº | DESCRIPCION | 01 | 02 | 03 | 04 | 05 | OBSERVACIONES |
|---|---|---|---|---|---|---|---|---|
| 1 | 5VK–83500–00 | VELOCIMETRO COMPLETO | 1 | 1 | 1 | 1 | | UR (KM/H) |
| | 5VK–83500–10 | VELOCIMETRO COMPLETO | | | | | 1 | UR (MPH) |
| 2 | 90164–05014 | TORNILLO ROSCA HEMBRA | 3 | 3 | 3 | 3 | 3 | |
| 3 | 90480–14555 | TAPON | 3 | 3 | 3 | 3 | 3 | |
| 4 | 5VK–H3519–00 | SOPORTE DE MEDIDOR | 1 | 1 | 1 | 1 | 1 | |
| 5 | 92017–06014 | PERNO | 2 | 2 | 2 | 2 | 2 | |
| 6 | 90464–12089 | BRIDA | 1 | 1 | 1 | 1 | 1 | |

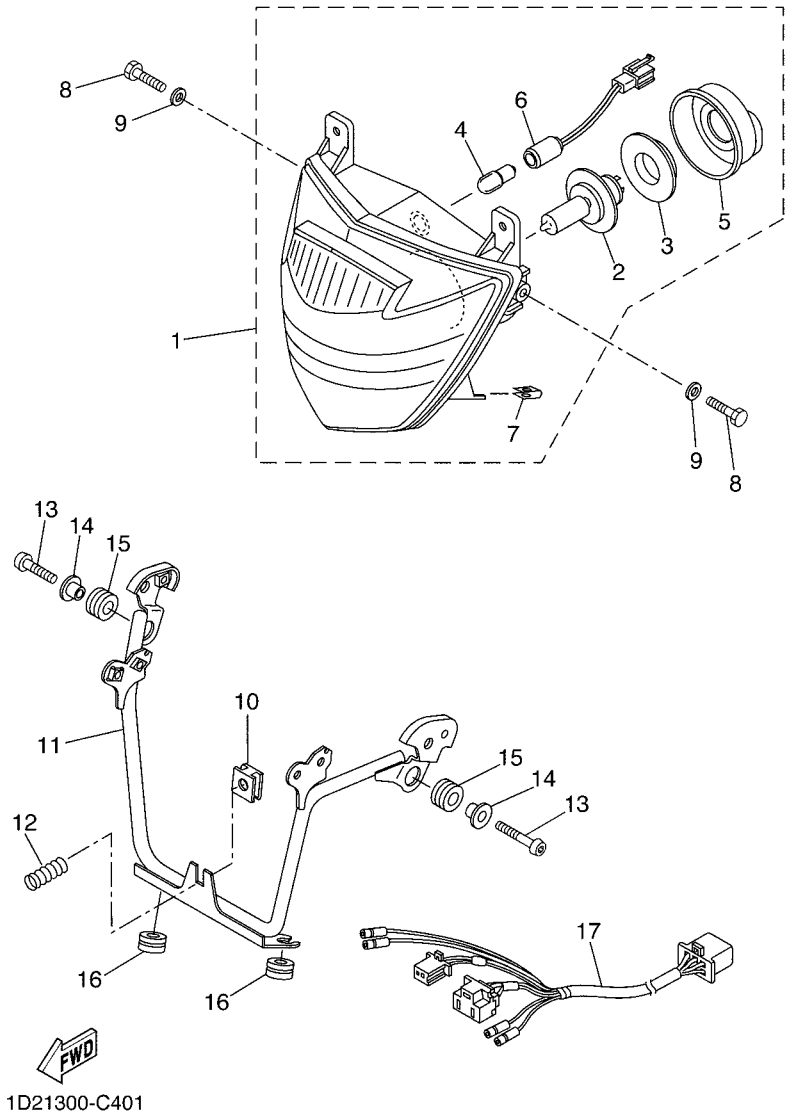


## FIG. 40 FARO DELANTERO

| REF. Nº | CODIGO Nº | DESCRIPCION | 01 | 02 | 03 | 04 | 05 | OBSERVACIONES |
|---|---|---|---|---|---|---|---|---|
| 1 | 5VK–H410A–00 | UNIDAD DE FARO DELANTERO COMPL | 1 | 1 | | 1 | | UR |
| | 5VK–H410A–10 | UNIDAD DE FARO DELANTERO COMPL | | | 1 | | 1 | UR |
| 2 | 5VK–H4314–00 | .BOMBILLA DE FARO DELANTERO | 1 | 1 | 1 | 1 | 1 | H4-12V 55/60W |
| 3 | 5VK–H4393–00 | .COJINETE, BOMBILLA | 1 | 1 | 1 | 1 | 1 | |
| 4 | 3WW–H4347–00 | .AMPOLLETA (12V-5W) | 1 | 1 | 1 | 1 | 1 | |
| 5 | 5VK–H4397–00 | .CUBIERTA DE ENCASTRE | 1 | 1 | 1 | 1 | 1 | |
| 6 | 5VK–H4312–00 | .CABLE COMPLETA | 1 | 1 | 1 | 1 | 1 | |
| 7 | 90183–05808 | .TUERCA DE RESORTE | 2 | 2 | 2 | 2 | 2 | |
| 8 | 90101–06815 | TORNILLO | 2 | 2 | 2 | 2 | 2 | |
| 9 | 90201–06839 | ARANDELA PLANA | 2 | 2 | 2 | 2 | 2 | |
| 10 | 5VK–H4334–00 | TUERCA DE AJUSTE | 1 | 1 | | 1 | | |
| 11 | 5VK–H4118–00 | APOYO DE FARO DELANTERO 1 | 1 | 1 | 1 | 1 | 1 | |
| 12 | 5VK–H4332–00 | RESORTE DE TORNILLO | 1 | 1 | 1 | 1 | 1 | |
| 13 | 92017–06020 | PERNO | 2 | 2 | 2 | 2 | 2 | |
| 14 | 90387–065G0 | ESPACIADOR | 2 | 2 | 2 | 2 | 2 | |
| 15 | 90480–15058 | TAPON | 2 | 2 | 2 | 2 | 2 | |
| 16 | 90480–15316 | TAPON | 2 | 2 | 2 | 2 | 2 | |
| 17 | 5VK–H4359–00 | CABLE DE FARO DELANTERO | 1 | 1 | 1 | 1 | 1 | |

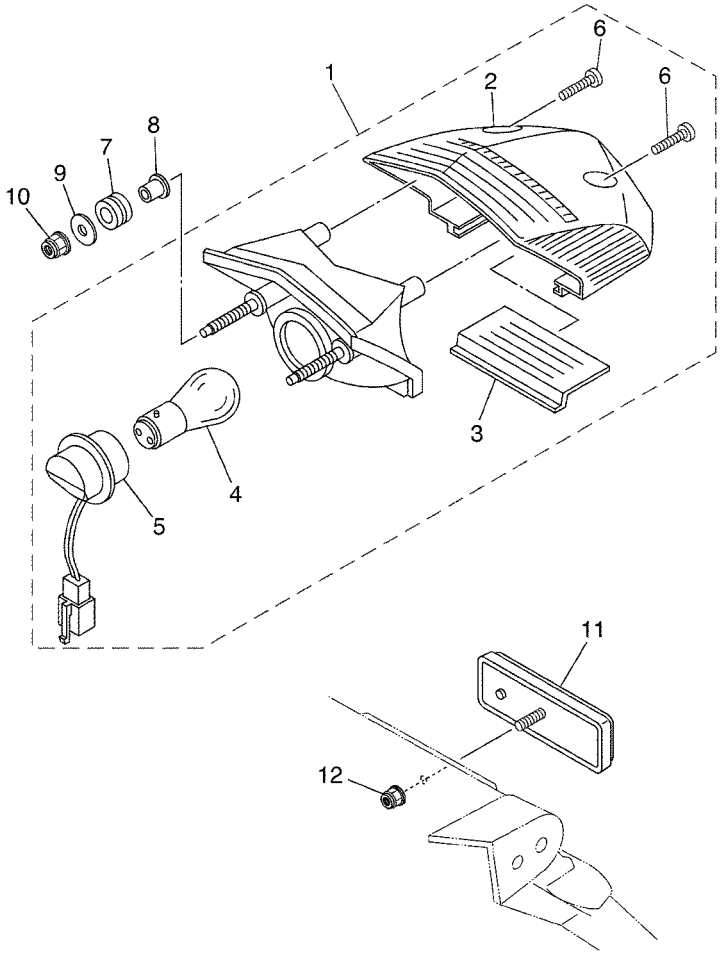


5VK1300-C410

## FIG. 41 LUZ DE COLA

| REF. Nº | CODIGO Nº | DESCRIPCION | 01 | 02 | 03 | 04 | 05 | OBSERVACIONES |
|---|---|---|---|---|---|---|---|---|
| 1 | 5VK–H4710–00 | UNIDAD FARO TRASERO COMPL. | 1 | 1 | 1 | 1 | 1 | |
| 2 | 5VK–H4721–00 | .LENTE DE FARO TRASERO | 1 | 1 | 1 | 1 | 1 | |
| 3 | 5VK–H4743–00 | .LENTE DE LUZ DE LICENCIA | 1 | 1 | 1 | 1 | 1 | |
| 4 | 1A2–84714–41 | .AMPOLLETA (12V-21/5W) | 1 | 1 | 1 | 1 | 1 | |
| 5 | 5VK–H4735–00 | .CABLE COMPLETA | 1 | 1 | 1 | 1 | 1 | |
| 6 | 5SE–H4724–00 | .TORNILLO ACCESORIO DE LENTE | 2 | 2 | 2 | 2 | 2 | |
| 7 | 90480–14329 | TAPON | 2 | 2 | 2 | 2 | 2 | |
| 8 | 90387–065G0 | ESPACIADOR | 2 | 2 | 2 | 2 | 2 | |
| 9 | 90201–06057 | ARANDELA PLANA | 2 | 2 | 2 | 2 | 2 | |
| 10 | 95607–06200 | TUERCA DE AUTO-CIERRE | 2 | 2 | 2 | 2 | 2 | |
| 11 | 3NC–H5130–00 | REFLECTOR TRASERO COMPLETO | 1 | 1 | 1 | 1 | 1 | |
| 12 | 95607–05200 | TUERCA DE AUTO-CIERRE | 1 | 1 | 1 | 1 | 1 | |

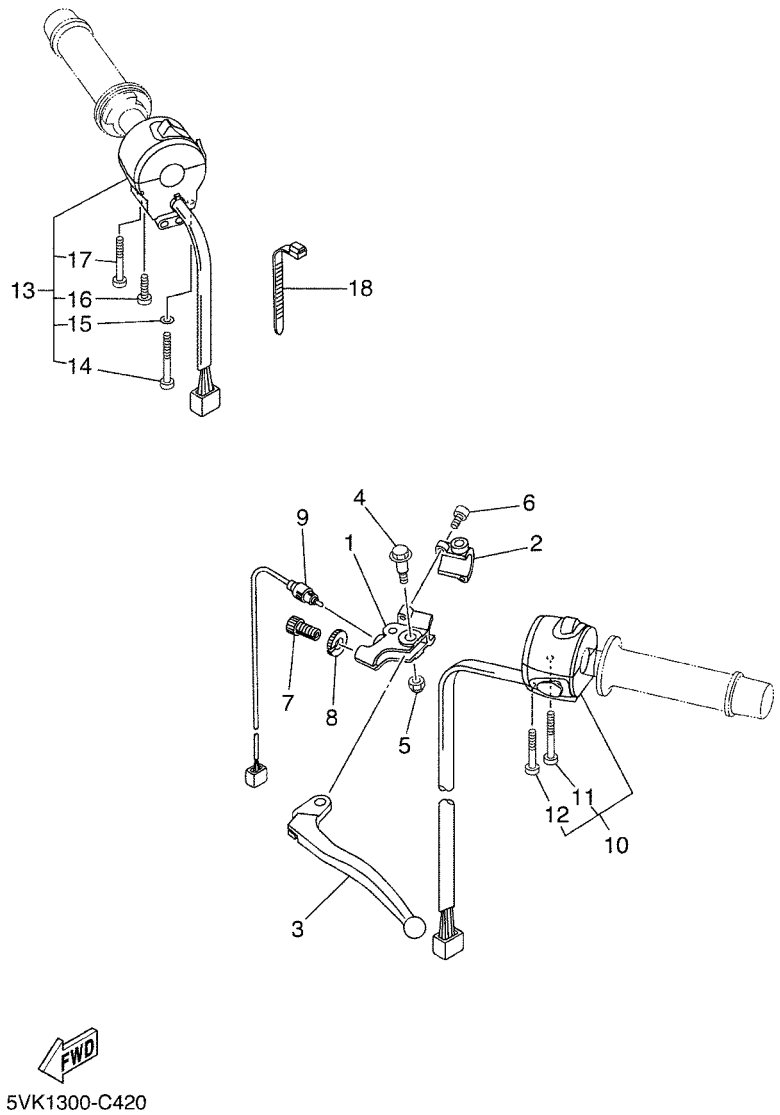


## FIG. 42 INTERRUPTOR DE MANILLAR&PALANC

| REF. Nº | CODIGO Nº | DESCRIPCION | 01 | 02 | 03 | 04 | 05 | OBSERVACIONES |
|---|---|---|---|---|---|---|---|---|
| 1 | 1LN–82911–00 | SOPORTE DE LEVA 1 | 1 | 1 | 1 | 1 | 1 | |
| 2 | 33G–82913–01 | SOPORTE DE LEVA INFERIOR 1 | 1 | 1 | 1 | 1 | 1 | |
| 3 | 3FY–83912–01 | PALANCA 1 | 1 | 1 | 1 | 1 | 1 | |
| 4 | 90109–06799 | PERNO | 1 | 1 | 1 | 1 | 1 | |
| 5 | 95607–06100 | TUERCA AUTOBLOCANTE | 1 | 1 | 1 | 1 | 1 | |
| 6 | 91317–05020 | PERNO | 2 | 2 | 2 | 2 | 2 | |
| 7 | 90123–08046 | PERNO | 1 | 1 | 1 | 1 | 1 | |
| 8 | 90179–08148 | TUERCA | 1 | 1 | 1 | 1 | 1 | |
| 9 | 5VK–82917–00 | INTERRUPTOR | 1 | 1 | 1 | 1 | 1 | |
| 10 | 5VK–83969–00 | INTERRUPTOR DE MANIJA 5 | 1 | 1 | 1 | 1 | 1 | |
| 11 | 98507–05030 | .TORNILLO DE CABEZA PLANA | 1 | 1 | 1 | 1 | 1 | |
| 12 | 98507–05045 | .TORNILLO DE CABEZA PLANA | 1 | 1 | 1 | 1 | 1 | |
| 13 | 5VK–83975–00 | INTERRUPTOR DE MANIJA 2 | 1 | 1 | 1 | 1 | 1 | |
| 14 | 98507–05055 | .TORNILLO DE CABEZA PLANA | 1 | 1 | 1 | 1 | 1 | |
| 15 | 92907–05600 | .ARANDELA | 1 | 1 | 1 | 1 | 1 | |
| 16 | 98507–05045 | .TORNILLO DE CABEZA PLANA | 1 | 1 | 1 | 1 | 1 | |
| 17 | 98507–05020 | .TORNILLO DE CABEZA PLANA | 1 | 1 | 1 | 1 | 1 | |
| 18 | 90464–25004 | BRIDA | 2 | 2 | 2 | 2 | 2 | |

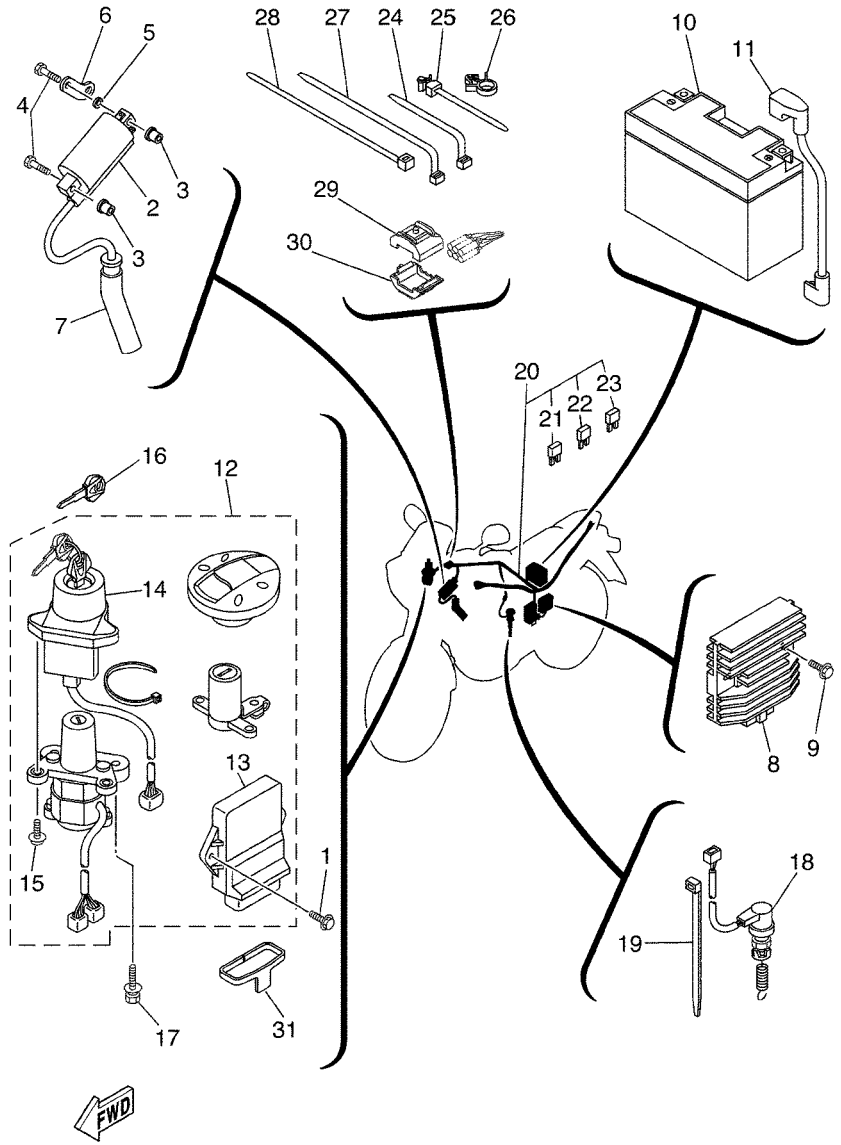


5VK1300-C430

## FIG. 43 EQUIPO ELECTRICO 1

| REF. Nº | CODIGO Nº | DESCRIPCION | 01 | 02 | 03 | 04 | 05 | OBSERVACIONES |
|---|---|---|---|---|---|---|---|---|
| 1 | 90119–06192 | TORNILLO CON ARANDELA | 2 | 2 | 2 | 2 | 2 | |
| 2 | 4GV–82310–00 | BOBINA DE ENCENDIDO COMPLETA | 1 | 1 | 1 | 1 | 1 | |
| 3 | 90179–05523 | TUERCA | 2 | 2 | 2 | 2 | 2 | |
| 4 | 97007–05025 | PERNO | 2 | 2 | 2 | 2 | 2 | |
| 5 | 90201–05556 | ARANDELA PLANA | 1 | 1 | 1 | 1 | 1 | |
| 6 | 5VK–82312–00 | SOSTEN ACCESORIO DE BOBINA | 1 | 1 | 1 | 1 | 1 | |
| 7 | 5VK–82370–00 | TAPON DE BUJIA COMPLT | 1 | 1 | 1 | 1 | 1 | |
| 8 | 5SL–81960–00 | RECTIFICADOR Y REGULADOR | 1 | 1 | 1 | 1 | 1 | |
| 9 | 95027–06020 | PERNO, DE BRIDA | 2 | 2 | 2 | 2 | 2 | |
| 10 | 5FL–82100–01 | BATERIA COMPLETA (GT9B-4) | 1 | 1 | 1 | 1 | 1 | |
| 11 | 5VK–H2115–00 | CABLE CONDUCTOR POSITIVO | 1 | 1 | 1 | 1 | 1 | |
| 12 | 5VK–W8250–00 | JUEGO DE INMOVILIZADOR | 1 | 1 | 1 | 1 | 1 | |
| 13 | 5VK–8591A–00 | .UNIDAD CONTROL | 1 | 1 | 1 | 1 | 1 | |
| 14 | 5VS–8255P–00 | .UNIDAD INMOVILIZADORA | 1 | 1 | 1 | 1 | 1 | |
| 15 | 5SL–82113–00 | .TORNILLO | 2 | 2 | 2 | 2 | 2 | |
| 16 | 5SL–82511–08 | BLANK KEY | 1 | 1 | 1 | 1 | 1 | AP |
| 17 | 90109–080G5 | PERNO | 2 | 2 | 2 | 2 | 2 | |
| 18 | 5VK–82530–00 | INTERRUPTOR DE PARADA COMPLETO | 1 | 1 | 1 | 1 | 1 | |
| 19 | 90464–16061 | BRIDA | 2 | 2 | 2 | 2 | 2 | |
| 20 | 5VK–H2590–00 | CONJUNTO DE CABLES | 1 | 1 | 1 | 1 | 1 | |
| 21 | 5JJ–82151–00 | .FUSIBLE (7.5A-BL) | 2 | 2 | 2 | 2 | 2 | |
| 22 | 5JJ–82151–30 | .FUSIBLE (10A-BL) | 6 | 6 | 6 | 6 | 6 | |
| 23 | 5JJ–82151–20 | .FUSIBLE (20A-BL) | 2 | 2 | 2 | 2 | 2 | |
| 24 | 90464–13077 | BRIDA | 4 | 4 | 4 | 4 | 4 | |
| 25 | 90464–12089 | BRIDA | 1 | 1 | 1 | 1 | 1 | |
| 26 | 90464–15157 | BRIDA | 1 | 1 | 1 | 1 | 1 | |
| 27 | 90464–15195 | BRIDA | 1 | 1 | 1 | 1 | 1 | |

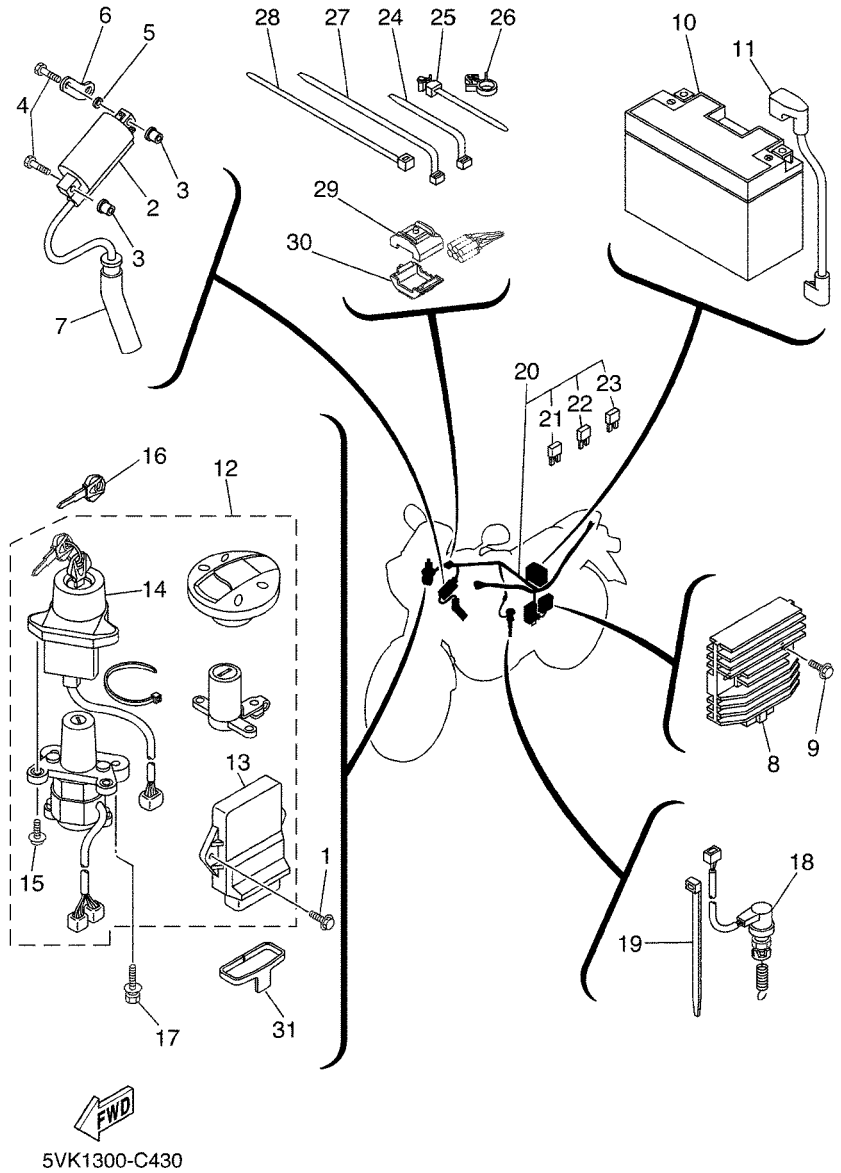


## FIG. 43 EQUIPO ELECTRICO 1

| REF. Nº | CODIGO Nº | DESCRIPCION | 01 | 02 | 03 | 04 | 05 | OBSERVACIONES |
|---|---|---|---|---|---|---|---|---|
| 28 | 1UA–82591–00 | BANDA | 12 | 12 | 12 | 12 | 12 | |
| 29 | 5VS–8258J–00 | CAJA DE CONECTOR 1 | 1 | 1 | 1 | 1 | 1 | |
| 30 | 5VS–8259J–00 | CAJA DE CONECTOR 2 | 1 | 1 | 1 | 1 | 1 | |
| 31 | 5WM–81614–00 | PROTECTOR | 1 | 1 | 1 | 1 | 1 | |

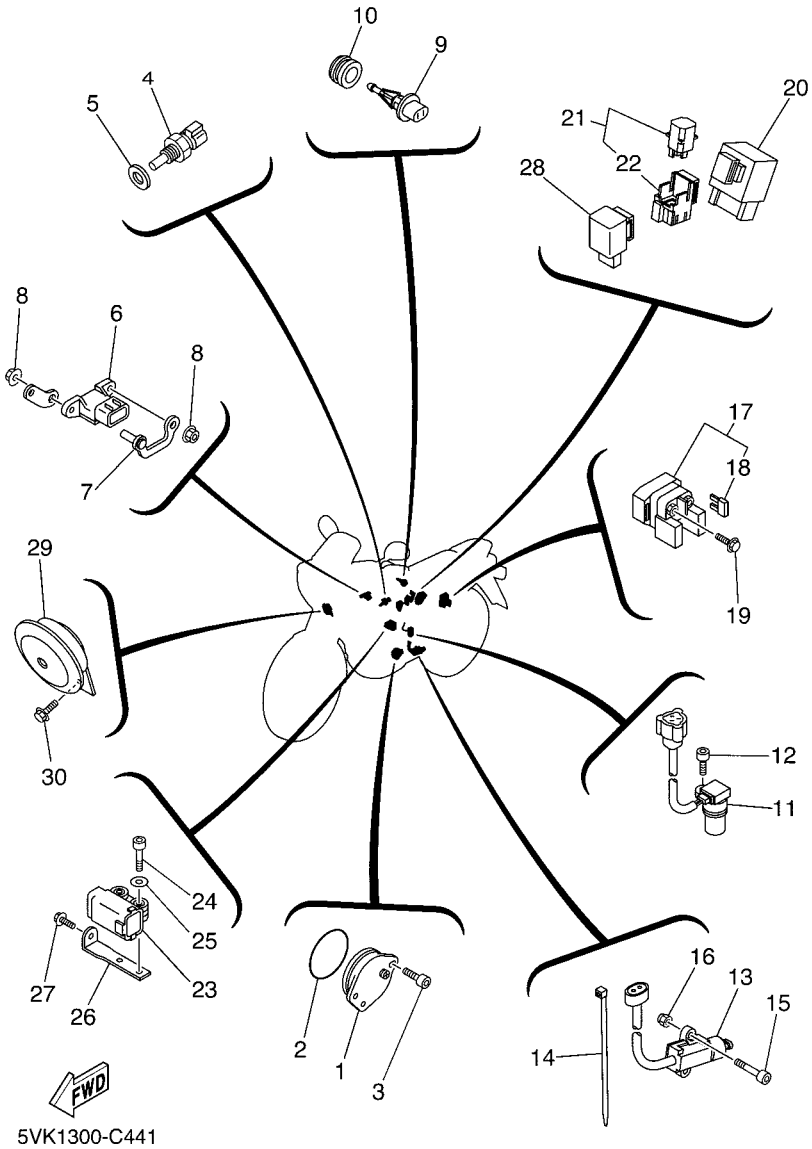


## FIG. 44 EQUIPO ELECTRICO 2

| REF. Nº | CODIGO Nº | DESCRIPCION | 01 | 02 | 03 | 04 | 05 | OBSERVACIONES |
|---|---|---|---|---|---|---|---|---|
| 1 | 1AE–82540–00 | INTERRUPTOR NEUTRAL COMPL | 1 | 1 | 1 | 1 | 1 | |
| 2 | 93210–29196 | ANILLO O | 1 | 1 | 1 | 1 | 1 | |
| 3 | 90110–06122 | TORNILLO ALLEN | 2 | 2 | 2 | 2 | 2 | |
| 4 | 5PS–85790–00 | TERMICA SENSORIO | 1 | 1 | 1 | 1 | 1 | |
| 5 | 90430–12202 | JUNTA | 1 | 1 | 1 | 1 | 1 | |
| 6 | 5PS–82380–00 | SENSOR DE PRESION | 1 | 1 | 1 | 1 | 1 | |
| 7 | 5VK–82388–00 | PLACA | 1 | 1 | 1 | 1 | 1 | |
| 8 | 95707–06500 | TUERCA DE BRIDA | 2 | 2 | 2 | 2 | 2 | |
| 9 | 5VU–85886–00 | SENSOR | 1 | 1 | 1 | 1 | 1 | |
| 10 | 5CA–14435–00 | ANILLO PROTECTOR | 1 | 1 | 1 | 1 | 1 | |
| 11 | 5LP–83755–01 | SENSOR DE VELOCI | 1 | 1 | 1 | 1 | 1 | |
| 12 | 91317–06014 | PERNO | 1 | 1 | 1 | 1 | 1 | |
| 13 | 5RT–82566–50 | INTERRUPTOR | 1 | 1 | 1 | 1 | 1 | |
| 14 | 90464–16061 | BRIDA | 1 | 1 | 1 | 1 | 1 | |
| 15 | 91317–05035 | PERNO | 2 | 2 | 2 | 2 | 2 | |
| 16 | 95607–05100 | TUERCA AUTOBLOCANTE | 2 | 2 | 2 | 2 | 2 | |
| 17 | 4SV–81940–12 | CONJUNTO ARRANCADOR RELEVO | 1 | 1 | 1 | 1 | 1 | |
| 18 | 1AE–82151–00 | .FUSIBLE (30A-BL) | 2 | 2 | 2 | 2 | 2 | |
| 19 | 95027–06008 | PERNO, DE BRIDA | 2 | 2 | 2 | 2 | 2 | |
| 20 | 5VK–81950–40 | RELE COMPLETO | 1 | 1 | 1 | 1 | 1 | |
| 21 | 5JJ–81950–20 | RELE COMPLETO | 2 | 2 | 2 | 2 | 2 | |
| 22 | 5JJ–81952–00 | .SOSTEN DE RELE | 1 | 1 | 1 | 1 | 1 | |
| 23 | 5PS–82576–01 | SENSOR ANGULO DE INCLINATION | 1 | 1 | 1 | 1 | 1 | |
| 24 | 91317–04025 | PERNO | 2 | 2 | 2 | 2 | 2 | |
| 25 | 90201–047A2 | ARANDELA PLANA | 2 | 2 | 2 | 2 | 2 | |
| 26 | 5VK–F1453–00 | SOPORTE, INTERRUPTOR | 1 | 1 | 1 | 1 | 1 | |
| 27 | 95807–06016 | TORNILLO | 1 | 1 | 1 | 1 | 1 | |

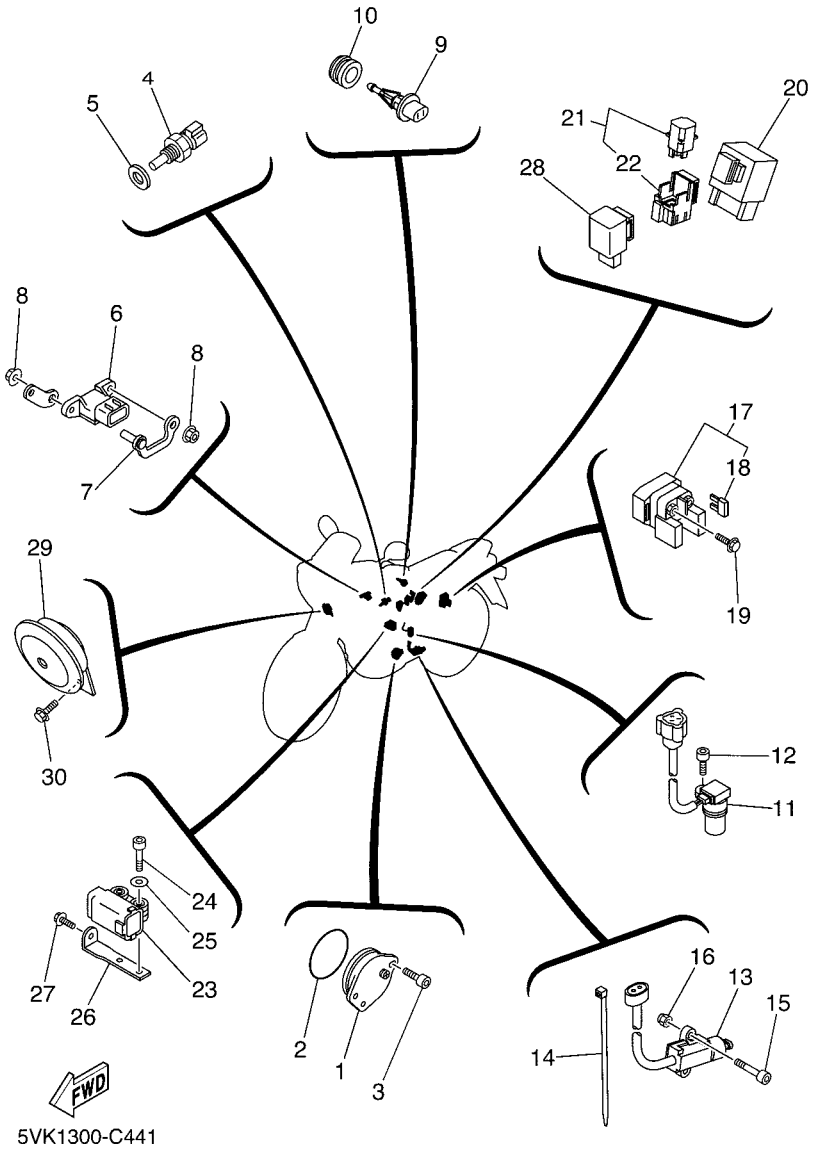


## FIG. 44 EQUIPO ELECTRICO 2

| REF. Nº | CODIGO Nº | DESCRIPCION | 01 | 02 | 03 | 04 | 05 | OBSERVACIONES |
|---|---|---|---|---|---|---|---|---|
| 28 | 4GY–83350–00 | RELE DE DESTELLADOR COMPL. | 1 | 1 | 1 | 1 | 1 | |
| 29 | 5VK–H3371–00 | BOCINA | 1 | 1 | 1 | 1 | 1 | |
| 30 | 95027–06010 | PERNO, DE BRIDA | 1 | 1 | 1 | 1 | 1 | |

INDICE NUMERICO

| CODIGO Nº | REF. Nº |
|---|---|
| 5VK–1111F–00 | B – 6 |
| 4G0–11133–11 | B – 2 |
| 5VK–11166–00 | C – 2 |
| 5VK–11181–00 | B – 2 |
| 214–11198–01 | B – 9 |
| 5VK–11311–00 | B – 3 |
| 5VK–11351–00 | B – 3 |
| 5VK–11400–00 | B – 4 |
| 5VK–11401–09 | B – 4 |
| 5VK–11422–00 | B – 4 |
| 5VK–11454–00 | B – 4 |
| 5VK–11531–00 | B – 4 |
| 5VK–11536–00 | B – 4 |
| 5VK–11603–00 | B – 4 |
| 5VK–11631–00 | B – 4 |
| 5VK–11633–00 | B – 4 |
| 5VK–11651–00 | B – 4 |
| 5VK–11681–00 | B – 4 |
| 5VK–12111–00 | B – 5 |
| 5VK–12113–00 | B – 5 |
| 3YF–12116–00 | B – 5 |
| 3YF–12117–01 | B – 5 |
| 4G0–12118–00 | B – 5 |
| 5H0–12119–00 | B – 5 |
| 5VK–12121–00 | B – 5 |
| 5VK–12146–00 | B – 5 |
| 5VK–12151–00 | B – 5 |
| 5BP–12159–01 | B – 5 |
| 5VK–12161–00 | B – 5 |
| 3TB–12210–00 | B – 6 |
| 4DW–12213–00 | B – 6 |
| 5VK–12231–00 | B – 6 |
| 5VK–12241–00 | B – 6 |
| 5VK–12280–00 | B – 6 |
| 5VK–12284–00 | B – 6 |
| 5VK–12290–00 | B – 6 |
| 5VK–12410–00 | B – 8 |
| 5VK–12421–00 | B – 7 |
| 5VK–12422–00 | B – 7 |
| 5VK–12428–00 | B – 7 |
| 5VK–12436–00 | B – 7 |
| 11H–12438–10 | B – 7 |
| 5VK–12450–00 | B – 7 |
| 5VK–12459–00 | B – 7 |
| 5VK–12481–00 | B – 7 |
| 5VK–12577–00 | B – 7 |
| 583–13113–00 | B – 10 |
| 5VK–13160–00 | B – 13 |

| CODIGO Nº | REF. Nº |
|---|---|
| 5VK–13161–00 | B – 9 |
| 5VK–13171–00 | B – 10 |
| 5VK–13181–00 | B – 9 |
| 5LP–13300–00 | B – 9 |
| 3AJ–13325–00 | B – 9 |
| 5VK–13327–00 | B – 9 |
| 5LP–13329–00 | B – 9 |
| 5VK–13356–00 | B – 9 |
| 4X7–13440–01 | B – 9 |
| 2WK–13447–00 | B – 9 |
| 5VK–13464–00 | B – 10 |
| 5VK–13465–00 | B – 10 |
| 5VK–13542–00 | B – 12 |
| 5VK–13586–00 | B – 11 |
| 5VK–13750–00 | B – 13 |
| 5VK–13761–00 | B – 13 |
| 5VK–13907–01 | D – 11 |
| 5VK–13971–00 | B – 12 |
| 5PS–14147–00 | B – 13 |
| 8CC–14216–10 | B – 13 |
| 5CA–14435–00 | F – 6 |
| 5VK–14503–00 | B – 13 |
| 5VK–14531–00 | B – 13 |
| 3YF–14613–01 | B – 15 |
| 4EL–14714–00 | B – 14 |
| 4FU–14714–00 | B – 14 |
| 5JX–14725–00 | B – 14 |
| 5VK–14803–00 | B – 15 |
| 5VK–14815–00 | B – 15 |
| 5VK–14871–01 | B – 15 |
| 5VK–14881–00 | B – 15 |
| 5VK–15199–01 | C – 5 |
| 5VK–15362–00 | C – 12 |
| 5VK–15455–00 | C – 4 |
| 1VJ–15511–00 | C – 5 |
| 3YF–15515–00 | C – 5 |
| 5VK–15517–00 | C – 5 |
| 5VK–15590–00 | C – 5 |
| 5VK–16111–00 | C – 6 |
| 5VK–16150–00 | C – 6 |
| 2JN–16154–00 | C – 6 |
| 22U–16321–00 | C – 6 |
| 5TA–16321–00 | C – 6 |
| 4X7–16325–00 | C – 6 |
| 5VK–16331–00 | C – 6 |
| 5VK–16340–00 | C – 6 |
| 132–16346–00 | C – 10 |
| 5VK–16351–00 | C – 6 |

| CODIGO Nº | REF. Nº |
|---|---|
| 4XV–16356–01 | C – 6 |
| 5VK–16371–00 | C – 6 |
| 5EB–16382–00 | C – 6 |
| 5JG–16383–00 | C – 6 |
| 5JG–16384–00 | C – 6 |
| 5VK–18101–00 | C – 11 |
| 5VK–18127–00 | C – 10 |
| 5JW–18140–00 | C – 10 |
| 5VK–18540–00 | C – 10 |
| 4UN–18542–00 | C – 10 |
| 4UN–18566–00 | C – 10 |
| 5VK–18699–00 | C – 10 |
| 3YX–21376–00 | C – 15 |
| 4XV–21376–00 | C – 15 |
| 5VK–21445–00 | C – 12 |
| 5VK–2153A–00 | C – 15 |
| 5VK–2153A–10 | C – 15 |
| 5VK–21639–00 | C – 14 |
| 5VK–21649–00 | C – 15 |
| 5VK–2173L–00 | D – 11 |
| 5VK–2173L–20 | D – 11 |
| 5VK–21746–00 | C – 13 |
| 5VK–2174L–00 | D – 11 |
| 5VK–2174L–20 | D – 11 |
| 5VK–21788–00 | D – 11 |
| 5VK–21788–20 | D – 11 |
| 26H–21828–00 | D – 2 |
| 5VK–21875–00 | D – 2 |
| 5VK–22123–00 | D – 3 |
| 5VK–22124–00 | D – 3 |
| 5VK–22125–00 | D – 3 |
| 1VJ–22141–00 | D – 4 |
| 10V–22178–00 | C – 12 |
| 30X–22178–00 | C – 12 |
| 10V–22184–00 | C – 12 |
| 30X–2219X–00 | D – 3 |
| 5VK–22210–01 | D – 5 |
| 4AA–22259–40 | D – 5 |
| 4DA–23145–L0 | D – 8 |
| 3XJ–23171–L0 | D – 8 |
| 4V4–23188–L0 | D – 8 |
| 5VK–23389–00 | D – 6 |
| 1W1–23416–00 | D – 6 |
| 3YF–23418–00 | D – 6 |
| 5VK–23430–00 | D – 6 |
| 4H7–23441–01–P5 | D – 6 |
| 3Y6–23442–00–P1 | D – 6 |
| 5VK–2414H–00 | D – 10 |

| CODIGO Nº | REF. Nº |
|---|---|
| 5VK–2414K–00 | D – 10 |
| 1D2–24161–00 | D – 11 |
| 1D2–24162–00 | D – 11 |
| 5VK–2416F–00 | D – 10 |
| 22W–24181–00 | B – 14 |
| 3TB–24181–00 | D – 10 |
| 5VK–24182–00 | D – 10 |
| 5VK–24183–00 | D – 10 |
| 5JW–24486–00 | D – 10 |
| 5VK–24602–00 | D – 10 |
| 4HM–24728–00 | D – 12 |
| 5VK–24731–01 | D – 12 |
| 5VK–24731–11 | D – 12 |
| 5VK–24737–00 | D – 12 |
| 1T4–24741–00 | C – 14 |
| 5VK–24747–00 | D – 12 |
| 4BP–24780–00 | D – 12 |
| 5VK–25111–00 | D – 14 |
| 136–25115–00 | D – 14 |
| 5VK–25117–00 | D – 14 |
| 5VK–25181–00 | D – 14 |
| 5VK–25311–00 | E – 2 |
| 5Y1–25364–00 | E – 2 |
| 5VK–25366–00 | E – 2 |
| 1VJ–25377–00 | E – 2 |
| 3AJ–25381–01 | E – 2 |
| 1UF–25388–00 | E – 2 |
| 3HT–25398–00 | D – 14 |
| | E – 2 |
| 5VK–25445–01 | E – 2 |
| 5CG–25715–00 | E – 6 |
| 4ML–2582A–50 | E – 9 |
| 5VK–2583V–00 | E – 9 |
| 3XP–25852–50 | E – 9 |
| 2VN–25854–00 | E – 9 |
| 55U–25854–00 | E – 6 |
| 2VN–25855–00 | E – 9 |
| 2VN–25866–00 | E – 9 |
| 56A–25867–00 | E – 6 |
| 5JJ–25894–00 | E – 9 |
| 5VK–25895–00 | E – 9 |
| 4YR–26240–02 | E – 5 |
| 4YR–26241–02 | E – 5 |
| 4JH–26246–00 | E – 5 |
| 1E6–26342–00 | E – 5 |
| 4SS–27218–00 | E – 9 |
| 2YK–27222–00 | E – 9 |
| 3KW–27234–00 | E – 9 |

| CODIGO Nº | REF. Nº |
|---|---|
| 5VK–27411–00 | E – 7 |
| 5VK–27421–00 | E – 7 |
| 5VK–28345–00 | D – 10 |
| 5DM–28371–00 | C – 14 |
| 5VK–28371–00 | D – 10 |
| 5VK–2837J–00 | E – 11 |
| 5VK–2837K–00 | E – 11 |
| 5VK–81410–00 | E – 12 |
| 5VK–81450–00 | E – 12 |
| 5WM–81614–00 | F – 5 |
| 3AJ–81801–00 | C – 5 |
| 3AJ–81809–00 | C – 5 |
| 5VK–81815–00 | C – 5 |
| 4XV–8182A–00 | C – 5 |
| 11H–81844–00 | C – 5 |
| 1FK–81847–00 | C – 5 |
| 3AJ–81850–00 | C – 5 |
| 4G0–81871–00 | C – 5 |
| 3SX–81890–00 | C – 5 |
| 4SV–81940–12 | F – 6 |
| 5JJ–81950–20 | F – 6 |
| 5VK–81950–40 | F – 6 |
| 5JJ–81952–00 | F – 6 |
| 5SL–81960–00 | F – 4 |
| 5FL–82100–01 | F – 4 |
| 5SL–82113–00 | F – 4 |
| 1AE–82151–00 | F – 6 |
| 5JJ–82151–00 | F – 4 |
| 5JJ–82151–20 | F – 4 |
| 5JJ–82151–30 | F – 4 |
| 4GV–82310–00 | F – 4 |
| 5VK–82312–00 | F – 4 |
| 5VK–82370–00 | F – 4 |
| 5PS–82380–00 | F – 6 |
| 5VK–82388–00 | F – 6 |
| 5SL–82511–08 | F – 4 |
| 5VK–82530–00 | F – 4 |
| 1AE–82540–00 | F – 6 |
| 5VS–8255P–00 | F – 4 |
| 5RT–82566–50 | F – 6 |
| 5PS–82576–01 | F – 6 |
| 5VS–8258J–00 | F – 5 |
| 1UA–82591–00 | F – 5 |
| 5VS–8259J–00 | F – 5 |
| 1LN–82911–00 | F – 3 |
| 33G–82913–01 | F – 3 |
| 5VK–82917–00 | F – 3 |
| 5VK–83345–00 | E – 13 |

| CODIGO Nº | REF. Nº |
|---|---|
| 4GY–83350–00 | F – 7 |
| 5VK–83359–00 | E – 13 |
| 5VK–83500–00 | E – 14 |
| 5VK–83500–10 | E – 14 |
| 5LP–83755–01 | F – 6 |
| 3FY–83912–01 | F – 3 |
| 5VK–83922–00 | E – 6 |
| 5VK–83969–00 | F – 3 |
| 5VK–83975–00 | F – 3 |
| 5VK–83980–00 | E – 6 |
| 1FK–84527–00 | B – 8 |
| 1A2–84714–41 | F – 2 |
| 5PS–85790–00 | F – 6 |
| 5PS–85885–00 | B – 13 |
| 5VU–85886–00 | F – 6 |
| 5VK–8591A–00 | F – 4 |
| 5VK–E1101–00 | B – 2 |
| 5VK–E1167–00 | B – 11 |
| 5VK–E1185–00 | B – 2 |
| 5VK–E1186–00 | B – 2 |
| 5VK–E2170–00 | B – 6 |
| 5VK–E2405–00 | B – 8 |
| 5VK–E2413–00 | B – 8 |
| 5VK–E2437–00 | B – 8 |
| 5VK–E2437–10 | B – 8 |
| 5VK–E243A–10 | B – 12 |
| 5VK–E2461–00 | B – 8 |
| 5VK–E2462–00 | B – 8 |
| 5VK–E2469–00 | B – 7 |
| 5VK–E2498–00 | B – 8 |
| 5VK–E2578–10 | B – 8 |
| 5VK–E2579–10 | B – 8 |
| 5VK–E3415–00 | B – 9 |
| 5VK–E3545–00 | B – 12 |
| 5VK–E3591–00 | B – 11 |
| 5VK–E4411–00 | B – 11 |
| 5VK–E441A–00 | B – 11 |
| 5VK–E441E–00 | B – 11 |
| 5VK–E4437–00 | B – 11 |
| 5LW–E443E–00 | B – 11 |
| 5VK–E443E–00 | B – 11 |
| 5VK–E4451–00 | B – 11 |
| 5VK–E4452–00 | B – 11 |
| 5VK–E4453–00 | B – 11 |
| 5VK–E4457–00 | B – 11 |
| 5VK–E4611–00 | B – 14 |
| 5VK–E4621–00 | B – 14 |
| 5VK–E4711–00 | B – 14 |

INDICE NUMERICO

| CODIGO Nº | REF. Nº |
|---|---|
| 5VK–E4718–00 | B – 14 |
| 5VK–E4721–00 | B – 14 |
| 5VK–E4728–00 | B – 14 |
| 5VK–E4738–00 | B – 14 |
| 5VK–E4748–00 | B – 14 |
| 5VK–E4882–00 | B – 15 |
| 5VK–E5100–00 | C – 2 |
| 5VK–E5118–00 | C – 3 |
| 5VK–E5371–00 | B – 11 |
| 5VK–E5383–00 | C – 2 |
| 5VK–E5416–00 | C – 3 |
| 5VK–E5421–00 | C – 3 |
| 5VK–E5431–00 | C – 3 |
| 5VK–E5441–00 | C – 3 |
| 5VK–E5451–00 | C – 3 |
| 5VK–E5453–00 | C – 4 |
| 5VK–E5462–00 | C – 3 |
| 5VK–E5522–00 | C – 5 |
| 5VK–E5560–00 | C – 5 |
| 5VK–E7121–00 | C – 8 |
| 5VK–E7131–00 | C – 8 |
| 5VK–E7141–00 | C – 8 |
| 5VK–E7141–10 | C – 8 |
| 5VK–E7151–00 | C – 8 |
| 5VK–E7151–10 | C – 8 |
| 5VK–E7211–00 | C – 8 |
| 5VK–E7211–10 | C – 8 |
| 5VK–E7221–00 | C – 8 |
| 5VK–E7231–00 | C – 8 |
| 5VK–E7241–00 | C – 8 |
| 5VK–E7251–00 | C – 8 |
| 5VK–E7401–00 | C – 8 |
| 5VK–E7402–00 | C – 8 |
| 5VK–E7460–00 | C – 9 |
| 5VK–E7466–00 | C – 3 |
| 5VK–E7471–00 | C – 9 |
| 5VK–E8110–00 | C – 11 |
| 5VK–E8113–00 | C – 11 |
| 5VK–E8144–00 | C – 10 |
| 5VK–E8501–00 | C – 10 |
| 5VK–E8502–00 | C – 10 |
| 5VK–E8503–00 | C – 10 |
| 5VK–F1110–10 | C – 12 |
| 5VK–F117F–00 | E – 10 |
| 5VK–F117M–00 | E – 9 |
| 5VK–F1315–00 | C – 12 |
| 5VK–F1316–00 | C – 12 |
| 5VK–F137W–01 | D – 10 |

| CODIGO Nº | REF. Nº |
|---|---|
| 5VK–F137W–21 | D – 10 |
| 5VK–F137X–01 | D – 10 |
| 5VK–F137X–21 | D – 10 |
| 5VK–F137Y–00 | D – 10 |
| 5VK–F1410–00 | C – 12 |
| 5VK–F1453–00 | F – 6 |
| 5VK–F1511–00 | C – 14 |
| 5VK–F1511–10 | C – 14 |
| 5VK–F1556–00 | C – 14 |
| 5WW–F1568–00 | D – 11 |
| 5VK–F1587–00 | C – 14 |
| 5VK–F160E–00 | C – 14 |
| 5VK–F1611–00 | C – 14 |
| 5VK–F1621–00 | B – 11 |
| 5VK–F1651–00 | C – 14 |
| 5VK–F1651–20 | C – 14 |
| 5VK–F1668–00 | D – 4 |
| 5VK–F1685–00 | C – 14 |
| 5VK–F1711–00 | D – 2 |
| 5VK–F1721–00 | D – 2 |
| 5VK–F1756–00 | C – 12 |
| 5VK–F1871–00 | D – 2 |
| 5VK–F2110–00 | D – 3 |
| 5VK–F2151–00 | D – 3 |
| 5VK–F2174–00 | E – 2 |
| 5VK–F217A–00 | D – 3 |
| 5VK–F217F–00 | D – 3 |
| 5VK–F2243–00 | D – 5 |
| 5VK–F2311–00 | D – 4 |
| 5VK–F3102–00 | D – 8 |
| 5VK–F3103–00 | D – 8 |
| 5VK–F3110–00 | D – 8 |
| 5VK–F3111–00 | D – 8 |
| 5VK–F3125–00 | D – 8 |
| 5VK–F3126–00 | D – 8 |
| 5VK–F3136–00 | D – 8 |
| 5VK–F3141–00 | D – 8 |
| 5VK–F3144–00 | D – 8 |
| 5VK–F3146–00 | D – 8 |
| 5VK–F3149–00 | D – 8 |
| 5VK–F3153–00 | D – 8 |
| 5JH–F3158–00 | D – 8 |
| 5VK–F3170–00 | D – 8 |
| 5VK–F3173–00 | D – 8 |
| 5VK–F317E–00 | D – 6 |
| 5VK–F317F–00 | D – 6 |
| 5VK–F317M–00 | D – 6 |
| 4CU–F3181–00 | D – 9 |

| CODIGO Nº | REF. Nº |
|---|---|
| 5VK–F3181–00 | D – 8 |
| 5VK–F3340–00 | D – 9 |
| 5VK–F334G–00 | D – 9 |
| 5VK–F334H–00 | D – 9 |
| 5SE–F3394–00 | D – 9 |
| 5VK–F3466–00 | D – 7 |
| 5VK–F3472–00 | D – 6 |
| 5VK–F4110–10–P0 | D – 10 |
| 5VK–F413B–01 | D – 10 |
| 5DN–F415A–10 | D – 11 |
| 5VK–F4186–00 | D – 10 |
| 5VK–F4491–00 | D – 10 |
| 3VL–F4741–10 | D – 12 |
| 5VK–F474A–00 | D – 12 |
| 5VK–F474W–00 | D – 12 |
| 5VK–F4770–01 | D – 12 |
| 5VK–F4770–11 | D – 12 |
| 5VK–F478E–00 | D – 12 |
| 5VK–F478X–00 | D – 12 |
| 5VK–F4792–00 | D – 12 |
| 5VK–F5104–00 | D – 14 |
| 5VK–F5183–00 | D – 14 |
| 5VK–F5186–00 | D – 14 |
| 5VK–F5304–00 | E – 2 |
| 5VK–F580T–00 | D – 15 |
| 5VK–F580W–00 | E – 4 |
| 5VK–F581T–00 | D – 15 |
| 5SE–F5824–00 | D – 15 |
| | E – 4 |
| 5DS–F5825–00 | D – 15 |
| | E – 4 |
| 5VK–F582W–00 | E – 4 |
| 5VK–F5872–00 | E – 6 |
| 5VK–F5873–00 | E – 9 |
| 5VK–F5875–00 | E – 9 |
| 5DS–F5917–00 | D – 15 |
| | E – 4 |
| 5VK–F5919–00 | D – 15 |
| 5VK–F5919–10 | E – 4 |
| 5VK–F5924–00 | D – 15 |
| 5VK–F5924–10 | E – 4 |
| 5VK–F6110–00 | E – 5 |
| 5VK–F6280–00 | E – 5 |
| 5VK–F6290–00 | E – 5 |
| 5VK–F6311–00 | E – 5 |
| 5VK–F6312–00 | E – 5 |
| 5VK–F6335–00 | E – 5 |
| 5VK–F7211–00 | E – 9 |

| CODIGO Nº | REF. Nº |
|---|---|
| 5VK–F7311–00 | E – 7 |
| 5VK–F7412–00 | E – 7 |
| 5VK–F741L–00 | E – 7 |
| 5VK–F7422–00 | E – 7 |
| 5VK–F742L–00 | E – 7 |
| 5VK–F7431–00 | E – 7 |
| 5VK–F7441–00 | E – 8 |
| 5CH–F7491–00 | E – 4 |
| 5VK–F8100–00 | D – 12 |
| 5VK–F8116–00 | D – 12 |
| 5VK–F8199–D0 | D – 13 |
| 5VK–F8199–E0 | D – 12 |
| 5VK–F8199–F0 | D – 12 |
| 5VK–F8199–G0 | D – 13 |
| 5VK–F8199–H0 | D – 13 |
| 5VK–F8199–P0 | D – 12 |
| 5VK–F8199–S0 | D – 13 |
| 5VK–F8351–00 | E – 11 |
| 5VK–F8351–20 | E – 11 |
| 5VK–F8381–00 | E – 11 |
| 5VK–H2115–00 | F – 4 |
| 5VK–H2116–00 | C – 5 |
| 5VK–H2121–00 | B – 11 |
| 5VK–H2122–00 | B – 11 |
| 5VK–H2590–00 | F – 4 |
| 5VK–H3310–00 | E – 13 |
| 5VK–H3311–00 | E – 13 |
| 5VK–H3320–00 | E – 13 |
| 5VK–H3330–00 | E – 13 |
| 5VK–H3333–00 | E – 13 |
| 5VK–H333A–00 | E – 13 |
| 5VK–H3340–00 | E – 13 |
| 5VK–H3371–00 | F – 7 |
| 5VK–H3519–00 | E – 14 |
| 5VK–H410A–00 | E – 15 |
| 5VK–H410A–10 | E – 15 |
| 5VK–H4118–00 | E – 15 |
| 5VK–H4312–00 | E – 15 |
| 5VK–H4314–00 | E – 15 |
| 5VK–H4332–00 | E – 15 |
| 5VK–H4334–00 | E – 15 |
| 3WW–H4347–00 | E – 15 |
| 5VK–H4359–00 | E – 15 |
| 5VK–H4393–00 | E – 15 |
| 5VK–H4397–00 | E – 15 |
| 5VK–H4710–00 | F – 2 |
| 5VK–H4721–00 | F – 2 |
| 5SE–H4724–00 | F – 2 |

| CODIGO Nº | REF. Nº |
|---|---|
| 5VK–H4735–00 | F – 2 |
| 5VK–H4743–00 | F – 2 |
| 3NC–H5130–00 | F – 2 |
| 3XP–W0041–00 | E – 6 |
| 3BN–W0042–50 | E – 9 |
| 5VK–W0045–00 | D – 15 |
| 5VK–W0046–00 | E – 4 |
| 5VK–W1473–00 | B – 14 |
| 2TV–W2470–00 | D – 12 |
| 3GM–W2585–21 | E – 6 |
| 5VK–W2587–00 | E – 6 |
| 5VK–W8250–00 | F – 4 |
| 5VK–WE343–00 | B – 9 |
| 5VK–WE541–00 | C – 3 |
| 5VK–WE544–00 | C – 4 |
| 90101–06815 | E – 15 |
| 90101–06X26 | C – 9 |
| 90101–08428 | C – 12 |
| 90101–10659 | D – 3 |
| 90101–12742 | D – 5 |
| 90105–05361 | D – 6 |
| 90105–06X06 | B – 2 |
| | B – 8 |
| 90105–06X20 | C – 4 |
| 90105–07004 | B – 6 |
| 90105–09002 | B – 2 |
| 90105–09003 | B – 2 |
| 90105–09004 | B – 2 |
| 90105–10040 | C – 12 |
| 90105–10069 | D – 15 |
| 90105–10077 | B – 3 |
| 90105–10078 | B – 3 |
| 90105–10811 | E – 7 |
| 90105–10813 | E – 7 |
| 90105–10814 | E – 7 |
| 90109–06419 | B – 9 |
| 90109–06577 | E – 6 |
| 90109–06799 | F – 3 |
| 90109–06816 | E – 4 |
| 90109–080G5 | F – 4 |
| 90109–085E2 | B – 15 |
| 90109–085G6 | E – 9 |
| 90110–06122 | F – 6 |
| 90110–08096 | E – 8 |
| 90110–08232 | D – 12 |
| 90111–05011 | D – 6 |
| | D – 10 |
| 90111–06029 | E – 4 |

| CODIGO Nº | REF. Nº |
|---|---|
| 90111–08823 | D – 15 |
| 90116–10485 | E – 2 |
| 90119–05193 | D – 6 |
| 90119–06044 | E – 9 |
| 90119–06051 | C – 14 |
| 90119–06096 | C – 14 |
| 90119–06105 | C – 6 |
| 90119–06118 | C – 14 |
| 90119–06192 | F – 4 |
| 90119–06861 | D – 4 |
| 90119–06X05 | B – 6 |
| 90123–08046 | F – 3 |
| 90149–05110 | B – 9 |
| 90149–05321 | C – 10 |
| 90149–06280 | B – 14 |
| 90149–06298 | E – 10 |
| 90150–05023 | E – 11 |
| 90159–05083 | E – 11 |
| 90159–06078 | D – 2 |
| 90164–05014 | E – 14 |
| 90169–05801 | B – 8 |
| 90169–05802 | B – 8 |
| 90170–06128 | B – 5 |
| 90170–18003 | B – 4 |
| 90170–20274 | C – 6 |
| 90170–20327 | C – 6 |
| 90176–22081 | D – 6 |
| 90179–05523 | E – 11 |
| | F – 4 |
| 90179–06635 | D – 12 |
| 90179–08148 | F – 3 |
| 90179–08442 | B – 15 |
| 90179–10658 | C – 12 |
| 90179–16448 | B – 4 |
| 90179–18003 | C – 9 |
| 90179–25615 | D – 6 |
| 90183–05061 | D – 6 |
| | E – 11 |
| 90183–05808 | E – 15 |
| 90183–06023 | C – 14 |
| 90185–14002 | D – 3 |
| 90201–047A2 | F – 6 |
| 90201–05015 | B – 14 |
| 90201–05556 | F – 4 |
| 90201–05X08 | E – 12 |
| 90201–06026 | E – 13 |
| 90201–06057 | F – 2 |
| 90201–06060 | E – 7 |

INDICE NUMERICO

| CODIGO Nº | REF. Nº |
|---|---|
| 90201–064K6 | B – 12 |
| 90201–06839 | E – 15 |
| 90201–08083 | E – 9 |
| 90201–08759 | C – 5 |
| 90201–08X18 | C – 5 |
| 90201–096J9 | B – 2 |
| 90201–10141 | D – 6 |
| 90201–101A4 | B – 3 |
| 90201–101J1 | D – 3 |
| | E – 7 |
| 90201–10430 | E – 7 |
| 90201–10614 | C – 7 |
| 90201–10X03 | E – 6 |
| | E – 9 |
| 90201–120K4 | C – 10 |
| 90201–12541 | B – 7 |
| 90201–12575 | C – 10 |
| 90201–13013 | D – 4 |
| 90201–16013 | B – 4 |
| 90201–160F6 | D – 3 |
| 90201–160T2 | E – 3 |
| 90201–170T3 | E – 3 |
| 90201–177G4 | C – 10 |
| 90201–208G4 | C – 8 |
| 90201–220T0 | D – 6 |
| 90201–30X00 | B – 4 |
| 90201–30X01 | C – 5 |
| 90202–26142 | D – 6 |
| 90209–20012 | C – 6 |
| 90209–21351 | C – 8 |
| 90209–21X00 | C – 8 |
| 90209–22X00 | C – 8 |
| 90209–26348 | C – 8 |
| 90215–18X00 | B – 4 |
| 90215–20X00 | C – 6 |
| 90215–20X01 | C – 6 |
| 90215–21X00 | C – 9 |
| 90240–08124 | E – 9 |
| 90240–10800 | E – 7 |
| 90269–06008 | D – 10 |
| 90269–08066 | C – 14 |
| | D – 4 |
| 90280–05001 | B – 4 |
| 90282–05058 | B – 4 |
| 90282–07001 | C – 6 |
| 90338–06004 | D – 7 |
| 90338–08226 | C – 14 |
| 90338–08801 | B – 11 |

| CODIGO Nº | REF. Nº |
|---|---|
| 90338–28242 | D – 4 |
| 90340–14132 | B – 9 |
| 90340–14X00 | C – 3 |
| 90340–36X00 | C – 3 |
| 90380–22111 | D – 3 |
| 90387–05803 | C – 14 |
| 90387–06023 | B – 14 |
| 90387–06042 | B – 8 |
| 90387–06066 | D – 3 |
| 90387–06086 | E – 7 |
| 90387–06088 | E – 13 |
| 90387–062M9 | D – 2 |
| 90387–065G0 | E – 15 |
| | F – 2 |
| 90387–065X7 | C – 14 |
| 90387–06648 | C – 14 |
| 90387–06852 | E – 4 |
| 90387–07037 | B – 12 |
| 90387–075H4 | B – 12 |
| 90387–07717 | D – 2 |
| 90387–08024 | C – 12 |
| 90387–087L0 | C – 14 |
| 90387–10020 | E – 7 |
| 90387–127W0 | D – 3 |
| 90387–16011 | D – 3 |
| 90387–16012 | D – 3 |
| 90387–167R5 | D – 3 |
| 90387–17801 | E – 3 |
| 90387–17802 | E – 3 |
| 90387–21002 | C – 8 |
| 90387–25802 | C – 9 |
| 90401–08133 | B – 9 |
| 90401–10096 | B – 10 |
| 90401–10X03 | E – 6 |
| | E – 9 |
| 90430–05126 | B – 9 |
| 90430–06014 | B – 7 |
| 90430–08119 | C – 12 |
| 90430–08204 | B – 9 |
| 90430–09002 | B – 13 |
| 90430–10188 | B – 10 |
| 90430–12202 | F – 6 |
| 90430–22123 | C – 12 |
| 90445–08008 | D – 2 |
| 90445–08020 | D – 2 |
| 90445–11033 | B – 10 |
| 90445–12004 | B – 12 |
| 90450–59001 | B – 11 |

| CODIGO Nº | REF. Nº |
|---|---|
| 90450–72001 | B – 11 |
| 90462–06012 | C – 2 |
| 90462–16X00 | C – 3 |
| 90464–07259 | C – 15 |
| 90464–11008 | D – 2 |
| 90464–12001 | D – 6 |
| | E – 5 |
| 90464–12089 | E – 14 |
| | F – 4 |
| 90464–13077 | F – 4 |
| 90464–15157 | F – 4 |
| 90464–15195 | F – 4 |
| 90464–16006 | D – 2 |
| 90464–16061 | E – 13 |
| | F – 4 |
| | F – 6 |
| 90464–18004 | E – 5 |
| 90464–25004 | F – 3 |
| 90464–37257 | B – 15 |
| 90465–12013 | C – 2 |
| 90467–07138 | B – 12 |
| 90467–08003 | D – 2 |
| 90467–10008 | B – 10 |
| | C – 13 |
| 90467–11090 | B – 12 |
| 90467–11108 | B – 12 |
| 90467–12085 | E – 9 |
| 90467–12800 | B – 11 |
| 90467–13062 | B – 11 |
| 90467–14015 | C – 2 |
| 90467–14800 | B – 11 |
| 90467–17089 | B – 15 |
| 90467–170A0 | B – 15 |
| 90467–170A2 | B – 12 |
| 90467–17128 | B – 12 |
| 90467–17800 | C – 13 |
| 90467–17801 | B – 11 |
| 90467–19800 | C – 12 |
| 90467–23800 | B – 11 |
| 90467–27800 | B – 8 |
| 90467–29800 | B – 7 |
| | B – 8 |
| 90480–01141 | D – 10 |
| 90480–01558 | D – 2 |
| 90480–12581 | B – 14 |
| 90480–13398 | C – 5 |
| 90480–14329 | F – 2 |
| 90480–14555 | E – 14 |

| CODIGO Nº | REF. Nº |
|---|---|
| 90480–15001 | B – 12 |
| 90480–15058 | E – 15 |
| 90480–15316 | E – 15 |
| 90480–18276 | B – 8 |
| | B – 12 |
| 90480–20566 | B – 11 |
| 90501–043E0 | B – 10 |
| 90501–06022 | C – 10 |
| 90501–10312 | E – 6 |
| 90501–260A1 | C – 6 |
| 90504–18005 | E – 7 |
| 90506–20002 | E – 7 |
| 90506–20369 | E – 9 |
| 90508–16016 | C – 6 |
| 90508–20801 | E – 7 |
| 90508–20802 | E – 7 |
| 90560–17306 | E – 2 |
| 91317–04025 | F – 6 |
| 91317–05008 | B – 9 |
| 91317–05010 | D – 10 |
| 91317–05014 | E – 12 |
| 91317–05020 | F – 3 |
| 91317–05035 | F – 6 |
| 91317–06012 | B – 7 |
| | B – 10 |
| | C – 3 |
| 91317–06014 | F – 6 |
| 91317–06016 | B – 10 |
| | C – 2 |
| | D – 7 |
| 91317–06018 | B – 2 |
| 91317–06020 | B – 7 |
| | B – 9 |
| | C – 11 |
| 91317–06025 | B – 6 |
| | B – 10 |
| | C – 3 |
| 91317–06030 | B – 2 |
| | C – 2 |
| | C – 3 |
| 91317–06035 | C – 3 |
| | E – 5 |
| | E – 13 |
| 91317–06040 | B – 3 |
| | E – 7 |
| 91317–06045 | C – 2 |
| 91317–06050 | B – 7 |
| | C – 3 |

| CODIGO Nº | REF. Nº |
|---|---|
| 91317–06055 | C – 2 |
| 91317–06060 | C – 2 |
| 91317–06080 | C – 2 |
| 91317–06090 | C – 2 |
| 91317–06095 | B – 9 |
| 91317–08025 | C – 5 |
| 91317–08030 | D – 6 |
| 91317–08050 | D – 12 |
| 91380–06016 | B – 15 |
| 91401–16012 | E – 9 |
| 91401–25020 | E – 7 |
| 91808–16X00 | C – 2 |
| | C – 4 |
| 91810–14X00 | B – 10 |
| 92017–06014 | E – 13 |
| | E – 14 |
| 92017–06020 | E – 15 |
| 92017–06030 | E – 12 |
| 92017–06035 | B – 9 |
| 92907–05600 | F – 3 |
| 92907–06600 | E – 6 |
| 92907–08200 | C – 12 |
| 92907–08600 | C – 6 |
| | E – 2 |
| 93101–12173 | B – 7 |
| 93101–14164 | C – 3 |
| 93101–25106 | B – 4 |
| 93102–12106 | C – 10 |
| 93102–15212 | C – 7 |
| 93102–35368 | C – 9 |
| 93106–22019 | D – 3 |
| 93106–23002 | D – 14 |
| | E – 2 |
| 93106–30029 | E – 2 |
| 93108–35004 | D – 3 |
| 93109–17071 | D – 3 |
| 93109–20076 | D – 3 |
| 93210–07X01 | B – 9 |
| | C – 2 |
| 93210–10197 | B – 10 |
| 93210–11073 | B – 9 |
| 93210–13X00 | B – 9 |
| | C – 3 |
| 93210–14X00 | C – 3 |
| 93210–15171 | B – 10 |
| 93210–15620 | E – 9 |
| 93210–19123 | C – 12 |
| 93210–21X00 | B – 7 |

| CODIGO Nº | REF. Nº |
|---|---|
| 93210–22164 | C – 9 |
| 93210–29196 | F – 6 |
| 93210–33X00 | B – 7 |
| 93210–35X00 | C – 3 |
| 93210–41042 | B – 8 |
| 93210–61750 | B – 7 |
| 93210–64297 | B – 9 |
| 93210–78X00 | B – 2 |
| 93210–96X00 | B – 2 |
| 93306–00106 | B – 7 |
| 93306–00304 | C – 6 |
| 93306–004XL | C – 8 |
| 93306–004XM | C – 9 |
| 93306–072Y1 | B – 6 |
| 93306–20348 | D – 14 |
| | E – 2 |
| 93306–205XA | C – 8 |
| 93306–30437 | E – 2 |
| 93306–305X4 | B – 4 |
| | C – 9 |
| 93306–305YA | B – 4 |
| 93306–308Y0 | B – 4 |
| 93310–530C7 | C – 5 |
| 93310–84010 | B – 4 |
| 93315–11206 | C – 10 |
| 93315–22251 | D – 3 |
| 93315–31502 | C – 7 |
| 93315–31759 | D – 3 |
| 93315–32053 | D – 3 |
| 93317–11020 | C – 6 |
| 93332–00008 | D – 6 |
| 93332–000Y6 | D – 6 |
| 93410–17X00 | C – 10 |
| 93440–10085 | B – 2 |
| 93440–11024 | C – 5 |
| 93440–25084 | C – 8 |
| 93440–28062 | C – 8 |
| 93450–24824 | B – 4 |
| 93503–08007 | B – 10 |
| 93603–16219 | B – 7 |
| 93612–16X00 | B – 2 |
| 94418–21800 | D – 14 |
| 94427–17800 | E – 2 |
| 94568–B2110 | E – 2 |
| 94591–57126 | B – 6 |
| 94701–00X09 | B – 2 |
| 95024–08016 | C – 12 |
| 95024–08040 | B – 14 |

INDICE NUMERICO


| CODIGO Nº | REF. Nº |
|---|---|
| 95027–06008 | F – 6 |
| 95027–06010 | F – 7 |
| 95027–06012 | B – 6 |
| | E – 9 |
| 95027–06014 | D – 12 |
| 95027–06020 | F – 4 |
| 95027–06025 | B – 7 |
| 95027–08040 | D – 6 |
| 95307–08600 | E – 2 |
| 95604–16200 | E – 3 |
| 95606–06100 | E – 6 |
| 95607–05100 | F – 6 |
| 95607–05200 | F – 2 |
| 95607–06100 | E – 7 |
| | E – 13 |
| | F – 3 |
| 95607–06200 | F – 2 |
| 95607–08100 | C – 12 |
| 95607–10200 | D – 6 |
| | E – 2 |
| 95607–14200 | D – 4 |
| 95614–10100 | D – 3 |
| 95617–08618 | B – 2 |
| 95617–10100 | E – 7 |
| 95617–12100 | D – 5 |
| 95704–06500 | B – 12 |
| 95707–06500 | D – 12 |
| | F – 6 |
| 95807–06010 | B – 8 |
| 95807–06012 | C – 14 |
| | D – 2 |
| 95807–06014 | C – 14 |
| 95807–06016 | F – 6 |
| 95807–06020 | D – 3 |
| 95807–08012 | C – 12 |
| 95814–08035 | B – 14 |
| 95814–10070 | C – 12 |
| 95814–10100 | C – 12 |
| 95817–06035 | C – 5 |
| 95827–06012 | D – 10 |
| 95827–06020 | B – 12 |
| 95827–06025 | B – 12 |
| 95827–06030 | B – 12 |
| 95827–08040 | C – 12 |
| 97007–05012 | C – 14 |
| 97007–05025 | F – 4 |
| 97007–06025 | E – 6 |
| 97507–06525 | B – 8 |

| CODIGO Nº | REF. Nº |
|---|---|
| 97707–60020 | C – 14 |
| 9770M–50025 | B – 11 |
| 98507–05020 | F – 3 |
| 98507–05030 | F – 3 |
| 98507–05045 | F – 3 |
| 98507–05055 | F – 3 |
| 98507–06012 | B – 13 |
| 98706–04012 | E – 6 |
| 98980–06012 | B – 14 |
| 99001–07600 | C – 6 |
| 99001–10600 | C – 10 |
| 99009–10400 | C – 7 |
| 99009–11400 | B – 9 |
| 99009–12400 | B – 7 |
| 99009–20400 | C – 8 |
| 99530–12016 | C – 2 |
| | C – 3 |
| 99530–14016 | C – 2 |

| CODIGO Nº | REF. Nº |
|---|---|

| CODIGO Nº | REF. Nº |
|---|---|

| CODIGO Nº | REF. Nº |
|---|---|

| CODIGO Nº | REF. Nº |
|---|---|